Webb County

REMODELING AND ADDITIONS
JUSTICE OF THE PEACE, PRECINCT 4
COURT BUILDING

SPECIFICATIONS

HICKEY/PENA
ARCHITECTS PLUS, INC.

REMODELING AND ADDITIONS
JUSTICE OF THE PEACE, PRECINCT 4
COURT BUILDING

SPECIFICATIONS

May 29, 2012

REGISTERED ARCHITECT
ARTURO JASSO
19002
STATE OF TEXAS

5/29/12

COUNTY OF WEBB
LAREDO, TEXAS

HONORABLE DANNY VALDEZ, COUNTY JUDGE

COMMISSIONER'S COURT

COMMISSIONER FRANK SCIARAFFA,	PRECINCT 1
COMMISSIONER ROSAURA "WAWI" TIJERINA,	PRECINCT 2
COMMISSIONER JERRY GARZA,	PRECINCT 3
COMMISSIONER JAIME CANALES,	PRECINCT 4

THE COUNTY OF WEBB
REMODELING AND ADDITIONS
JUSTICE OF THE PEACE, PRECINCT 4
COURT BUILDING

BIDDING DOCUMENTS/CONTRACT FORMS/CONTRACT CONDITIONS

SEALED BID CHECKLIST	000005
PUBLIC NOTICE	000006
TERMS AND CONDITIONS OF INVITATIONS FOR BIDS	000007
NOTICE TO ALL BIDDERS	000011
REPORTING REQUIREMENTS	000012
INSURANCE REQUIREMENTS	000023
BONDING REQUIREMENTS	000024
BOND INSTRUCTIONS	000025
BID BOND FORM	000026
PERFORMANCE BOND FORM	000028
PAYMENT BOND FORM	000030
INFORMATION FOR BIDDERS	000031
AIA DOCUMENTS	000035
SUPPLEMENTAL INSTRUCTIONS TO BIDDERS	000036
BID FORM	000038
CONFLICT OF INTEREST DISCLOSURE	000040
CONFLICT OF INTEREST QUESTIONAIRE	000041
PROOF OF NO DELIQUENT TAXES OWED	000042
BIDDER INFORMATION FORM	000043
LIST OF SUBCONTRACTORS	000044
STANDARD FORM OF AGREEMENT	000045
PREVAILING WAGE RATES	000050
GENERAL CONDITIONS	000055
SUPPLEMENTARY GENERAL CONDITIONS	000056
SPECIAL CONDITIONS	000069
SUBSURFACE GEOTECHNICAL DATA	000070
TECHNICAL SPECIFICATIONS – TRENCH SAFETY SYSTEMS	000071

TECHNICAL SPECIFICATIONS

DIVISION 1 - GENERAL CONDITIONS

01010	Summary of Work	000073
01020	Allowances	000074
01030	Alternates	000076
01040	Project Coordination	000077
01043	M/E General Provisions	000078
01045	Cutting and Patching	000081
01050	Selective Demolition	000084
01090	Definitions and Standards	000088
01310	Schedules, Reports and Payments	000091
01340	Submittals	000093
01400	Quality Control Services	000096
01505	Temporary Facilities	000097

01605	Products and Substitutions	000100
01705	Project Close-out	000102

DIVISION 2 - SITEWORK

02110	Site Clearing	000104
02200	Earthwork	000105
02282	Termite Control	000111
02480	Chain-Link Fences and Gates	000113

DIVISION 3 - CONCRETE

03300	Cast-In-Place Concrete	000115

DIVISION 4 - MASONRY

04200	Unit Masonry	000134

DIVISION 5 - METALS

05000	Metal Fabrications	000136

DIVISION 6 - WOOD AND PLASTICS

06100	Rough Carpentry	000137
06192	Pre-fabricated Wood Trusses	000146
06200	Finish Carpentry	000148
06400	Architectural Woodwork	000149

DIVISION 7 - THERMAL AND MOISTURE PROTECTION

07200	Insulation	000151
07410	Pre-formed Roof and Wall Panels	000155
07411	Metal Roof Panels (Additive Alternate)	000157
07450	Mechanically Fastened Roof System	000166
07600	Flashing and Sheet Metal	000179
07700	Expansion Joint Covers	000180
07900	Joint Sealers	000181

DIVISION 8 - DOORS AND WINDOWS

08110	Steel Doors and Frames	000182
08210	Doors	000184
08410	Aluminum Storefronts	000186
08710	Finish Hardware	000188
08810	Thresholds and Weatherstripping	000193

DIVISION 9 - FINISHES

09250	Gypsum Board	000194
09300	Veneer Plaster	000199
09310	Tile	000202
09510	Acoustical Ceilings	000203
09650	Resilient Floor	000205
09680	Carpet	000207
09721	Vinyl-Coated Fabric Wall Coverings	000212

09900	Painting	000216
DIVISION 10 - SPECIALTIES		
10440	Architectural Signage	000220
DIVISION 11 - EQUIPMENT		**N/A**
DIVISION 12 - FURNISHINGS		
12390	Kitchen Cabinets	000221
DIVISION 13 - SPECIAL CONSTRUCTION		**N/A**
DIVISION 14 - CONVEYING SYSTEM		**N/A**
DIVISION 15 – MECHANICAL & DIVISION 16 – ELECTRICAL		REFER TO PLANS

THIS FORM MUST BE INCLUDED WITH THE Bid Package; PLEASE CHECK OFF EACH ITEM THAT APPLIES AND SIGNED

Sealed Bid Checklist

Bid 2012-201 "Webb County-Remodeling & Additions to Justice of the Peace, Precinct 4-Court Building"

- ☐ Public Notice
- ☐ Read Terms and Conditions
- ☐ Notice to All Bidders
- ☐ Insurance
- ☐ Bid Bond (required)
- ☐ Bond Instructions
- ☐ Bid Requirements
- ☐ Bid Form (required)
- ☐ Conflict of Interest Forms (required)
- ☐ Bidders Information (required)
- ☐ Proof of no delinquent taxes owed to Webb County (required)
- ☐ Certification Regarding Debarment
- ☐ Contractor's Qualification (AIA Doc A305) (required)

X_____

Signature of person
Completing this form

Public Notice

Notice is hereby given that the County of Webb is accepting sealed bids for the Webb County – Remodeling & Additions to Justice of the Peace, Precinct 4 – Court Building located at 8501 San Dario Ave. Laredo, Texas 78045.

BID 2012-201 "Webb County – Remodeling & Additions to Justice of the Peace, Precinct 4 –Court Building

Sealed bids must be submitted with (1) original and (8) eight copies in one sealed envelope.

Sealed envelopes must be marked (Sealed Bids) with Bid number on front lower left-hand corner of envelope.

Bids must be hand delivered or mailed to the following location:

Webb County Clerk
Webb County Justice Center
1110 Victoria St., Suite 201
Laredo, Texas 78040

A pre bid conference will be held on **Tuesday June 26, 2012 at 10:00 a.m.** at the Webb County William N. "Billy" Hall Administrative Building, 1110 Washington Suite 101, Purchasing Department Conference Room to answer any questions and review plans and specifications.

Bids must be delivered no later than **Monday, July 2, 2012 at 2:00 p.m**. at which time all bids received will be opened and read to the public. Late bids will not be considered.

If any additional information is required please contact, Leticia Gutierrez, Webb County Purchasing Department, 1110 Washington, Suite 101, (956) 523-4125, Laredo, Texas 78040.

Please visit our web-site for a copy of plans and specifications www.webbcountytx.gov under Purchasing Agent, if you need a hardcopy of the specifications, the cost will be $50.00 non-refundable.

_____
Dr. Cecilia May Moreno
Purchasing Agent

COUNTY OF WEBB

Terms and Conditions of Invitations for Bids

1. GENERAL CONDITIONS:

Bidders are required to submit their proposals upon the following expressed conditions:

(A) Bidders shall thoroughly examine the drawings, specification schedule, instructions and all other contract documents.

(B) Bidders shall make all investigations necessary to thoroughly inform themselves regarding plant and facilities for delivery of materials and equipment as required by the bid conditions. No plea of ignorance by the bidder of conditions that exist or that may hereafter exist as a result of failure to fulfill in every detail the requirements of the contract documents of the County or the compensation of the vendor.

(C) Bidders are advised that all County contracts be subject to all legal requirements provided for in county, state and federal statutes and regulations.

2. PREPARATION OF BIDS:

Bids will be prepared in accordance with the following:

(A) All information required by the bid form shall be furnished. The bidder shall print or type his name and manually sign the schedule and each continuation sheet on which an entry is made.

(B) Unit prices shall be shown and where there is an error in extension of prices, the unit price shall govern.

(C) Alternate bids will not be considered unless authorized by the Invitation for Bids.

(D) Proposed delivery time must be shown and shall include Sundays and holidays.

(E) Bidders will not include Federal taxes or State of Texas limited sales excise and use taxes in bid prices since the County of Webb is exempt from payment of such taxes. An exemption certificate will be signed where applicable upon request.

3. DESCRIPTION OF SUPPLIES:

Any catalog or manufacturer's reference used in describing an item is merely descriptive, and not restrictive, unless otherwise noted, and is used only to indicate type and quality of material. Bidders are required to state exactly what they intend to furnish otherwise they shall be required to furnish the items as specified.

4. SUBMISSION OF BIDS:

(A) Bids and changes thereto shall be enclosed in sealed envelopes addressed to the Webb County Clerk. The name and address of the bidder, the date of the bid opening and the material or service bid on shall be placed on the outside of the envelope.

(B) Bids must be submitted in the forms furnished. Telegraphic bids will not be considered. Bids, however, may be modified by telegraphic notice provided such notice is received before the time and date set for the bid opening.

(C) Samples, when required, must be submitted within the time specified, at no expense to the County of Webb. If not destroyed or used up during testing, samples will be returned upon request at the bidder's expense.

5. REJECTION OF BIDS:

(A) The Purchasing Agent may reject a bid if it is not satisfactory to Commissioners' Court because:

(1) The bidder misstates or conceals any material fact in the bid or if,

(2) The bid does not strictly conform to the law or the requirements of the bid, or if,

(3) The bid is conditional, except that the bidder may qualify his bid for acceptance by the County on an "All or None" basis or a "low item" basis. An "All or None" basis bid must include all items upon which bids are invited.

(B) No bid submitted herein shall be considered if the bidder owes any delinquent taxes to the County of Webb at the time bids are opened. In the event that the successful bidder herein subsequently becomes delinquent in the payment of his or its County taxes, such fact shall constitute grounds for cancellation of the contract.

(C) No bid submitted herein shall be considered unless the bidder warrants that upon execution of a contract with the County of Webb, he will not engage in employment practices which have the effect of discriminating

against employees or prospective employees because of race, color, sex, creed, or national origin and will submit such report as the County may thereafter require to assure compliance.

(D) The County may, however, reject all bids whenever it is deemed in the best interest of the County to do so, and may reject any part of a bid unless the bid has been qualified as provided in 5 (a) 3 above. The County may also waive any minor informalities or irregularities in any bid.

6. WITHDRAWAL OF BIDS:

Bids may not be withdrawn after the time set for the bid opening, unless approved by Commissioners' Court.

7. LATE BIDS OR MODIFICATIONS:

Bids and modifications received after the time set for the bid submission will not be considered.

8. CLARIFICATIN OR OBJECTION TO BID SPECIFICATIONS:

If any person contemplating submitting a bid for this contract is in doubt as to the true meaning of the specifications, or other bid documents or any part thereof, he may submit to the Purchasing Agent on or before five days prior to scheduled opening a request for clarification. All such requests for information shall be made in writing and the person submitting the request will be responsible for its prompt delivery. Any interpretation of the bid, if made, will be made only by Addendum duly issued. A copy of such Addendum will be emailed to person receiving a set of bids. The County will not be responsible for any other explanation or interpretation of the proposed bid made or given prior to the award of the contract. Any objections to the specifications and requirements as set forth in this bid must be filed in writing with the Purchasing Agent on or before five days prior to the scheduled opening.

9. PERFORMANCE DEPOSIT:

(A) The successful bidder(s) must furnish the County of Webb a performance deposit in the amount set forth in the Invitation for Bids. This deposit is not to be submitted with bids, but must be presented to the Purchasing Department upon notification.

(B) The County of Webb will not enter a contract or issue a purchase order until the successful bidder has complied with the performance deposit provisions.

(C) The performance deposit shall be in the form of a bond, certified check upon a State or National Bank or Trust Company signed by a duly

authorized officer, thereof, or a certificate of deposit from such bank or trust company. All such bonds, checks and certificate of deposit shall be drawn payable to the order to the Webb County Treasurer and submitted to the Purchasing Agent's Office.

(D) The performance deposit of the successful bidder(s) shall be returned by the County upon completion of the contract and final acceptance of all items in accordance with conditions thereof.

(E) Failure of vendor to perform any of the services by this contract, within ten days of receipt of written demand for performance from County, or failure of vendor to correct or replace defective goods or products, within ten days from receipt of written demand will therefore, shall constitute a total breach of this contract, and shall be cause for termination. In the event of such termination the performance deposit shall be retained by the County of Webb as liquidated damages, based upon mutual agreement and understanding between vendor and County at the time this bid is solicited, submitted and accepted, that the County of Webb is a governmental agency engaged in public projects, and that the measurement of damages which might result from a breach of the terms and specifications herein is difficult or impossible to determine. Provided, however, that if in the opinion of the Purchasing Agent and the Commissioners' Court the failure of vendor to perform the conditions of this contract is occasioned by or is the result of acts or events over which the vendor has no control, said performance deposit may in whole or in part, as may be determined by the Purchasing Agent and the Commissioners' Court, be returned to the vendor. It is understood that such determination shall be entirely discretionary with the Purchasing Agent and the Commissioners' Court.

12. WORKERS' COMPENSATION INSURANCE COVERAGE:

The Workers' Compensation Commission has adopted Rule 110.110 effective with all bids advertised after September 1, 1994. The TWCC has stated that it is aware that a statutory requirement for workers' compensation insurance coverage is not being met. Therefore, Rule110.110 requires that all bidders be covered under workers' compensation insurance to achieve compliance from both contractor(s) and governmental entities. **Attachment Notice to all bidders** is provided in accordance with the requirements on governmental entities. Please read carefully and prepare your bid in full compliance to TWCC Rule 110.110. Failure to provide the required certificates upon submission of a bid could result in your bid being declared non-responsive.

NOTICE TO ALL BIDDERS

The Texas Workers' Compensation Commission has adopted Rule 110.110 effective with all bids advertised after September 1, 1994 and these changes affect your bid on this project.

The TWCC has stated that it is aware that statutory requirements provided for workers' compensation insurance coverage is not being met. Rule 110.110 is designed to achieve compliance from both contractors and governmental entities... This affects both of us on this project.

Providing false or misleading certificates of coverage, failing to provide or maintain required coverage, or failing to report any change that materially affects the coverage may subject the contractor(s) or other persons providing services on this project to legal penalties. This affects your subcontractors.

Therefore, the attached is provided in accordance with the requirements on governmental entities. Please read carefully and prepare your bid in full compliance to TWCC Rule 110.110. Failure to provide the required certificates upon submission of a bid could result in your bid being declared non-responsive.

According to TWCC, "This rule does not create any duty or burden on anyone which the law does not establish." Therefore, the county should not experience any increase in cost because of the need to comply with the Texas Worker's Compensation laws.

Dr. Cecilia May Moreno
Webb County Purchasing Agent

§110.110. Reporting Requirements for Building or Construction Projects for Governmental Entities.

(a) The following words and terms, when used in this rule, shall have the following meanings, unless the context clearly indicates otherwise. Terms not defined in this rule shall have the meaning defined in the Texas Labor Code, if so defined.

(1) Certificate of coverage (certificate) –A copy of a certificate of insurance, a certificate of authority to self-insure issued by the commission, or workers' compensation coverage agreement (TWCC-81, TWCC-82, TWCC-83, or TWCC-84), showing statutory workers' compensation insurance coverage for the person's or entity's employees (including those subject to a coverage agreement) providing services on a project, for the duration of the project.

(2) Building or construction—Has the meaning defined in the Texas Labor Code, §406.09(e)(1).

(3) Contractor –A person bidding for or awarded a building or construction project by a governmental entity.

(4) Coverage—Workers' compensation insurance meeting the statutory requirements of the Texas Labor Code, §401.011(44).

(5) Coverage agreement—A written agreement on form TWCC-81, form TWCC-82, form TWCC-83, or form TWCC-84, filed with the Texas Workers' Compensation Commission which establishes a relationship between the parties for purposes of the Texas Workers' Compensation Act, pursuant to the Texas Labor Code, Chapter 406, Subchapter F and G, as one of employer/employee and establishes who will be responsible for providing workers' compensation coverage for persons providing services on the project.

(6) Duration of the project—Includes, the time from the beginning of work on the project until the work on the project has been completed and accepted by the governmental entity.

(7) Persons providing services on the project ("subcontractor" in §406.096 of the Act)—With the exception of persons excluded under subsection (h) and (i) of this section, includes all persons or entities performing all or part of the services the contractor has undertaken to perform on the project, regardless of whether that person contracted directly with the contractor

and regardless of whether that person has employees. This includes but is not limited to independent contractors, subcontractors, leasing companies, motor carriers, owner-operators, employees of any such entity, or employees of any entity furnishing persons to perform services on the project. "Services" includes but not limited to providing, hauling, or delivering equipment or materials, or providing labor, transportation, or other service related to a project. Services" does not include activities unrelated to the project, such as food/beverage vendors, office supply deliveries, and delivery of portable toilets.

(8) Project—Includes the provision of all services related to a building or construction contract for a governmental entity.

(b) Providing or causing to be provided a certificate of coverage pursuant to this rule is a representation by the insured that all employees of the insured who are providing services on the project are covered by workers' compensation coverage, that the coverage is based on proper reporting of classification codes and payroll amounts, and that all coverage agreements have filed with the appropriate insurance carrier or, in the case of a self-insured, with the commission's Division of Self-Insurance Regulation. Providing false or misleading certificates of coverage, or failing to provide or maintain required coverage, or failing to report any change that materially affects the provision of coverage may subject the contractor or other person providing services on the project to administrative penalties, criminal penalties, civil penalties, or other civil actions.

(c) A governmental entity that enters into a building or construction contract on a project shall:

(1) include in the bid specifications, all the provisions of paragraph (7) of this subsection, using the language required by paragraph (7) of this subsection;

(2) as part of the contract, using the language required by paragraph (7) of this subsection, require the contractor to perform as required in subsection (d) of this section;

(3) obtain from the contractor a certificate of coverage for each person providing services on the project, prior to that person beginning work on the project;

(4) obtain form the contractor a new certificate of coverage showing extension of coverage:

(A) before the end of the current coverage period, if the contractor's current certificate of coverage shows that the coverage period ends during the duration of the project; and

(B) no later than seven days after the expiration of the coverage for each other person providing services on the project whose current certificate shows that the coverage period ends during the duration of the project; and

(5) retain certificates of coverage on file for the duration of the project and for three years thereafter,

(6) provide a copy of the certificates of coverage to the commission upon request and to any person entitled to them by law; and

(7) use the language contained in the following Figure 1 for bid specifications and contracts, without any additional words or changes, except those required to accommodate the specific document in which they are contained or to impose stricter standards of documentation:

Article _____ Workers' Compensation Insurance coverage.

A. Definitions:

Certificate of coverage ("certificate ") – A copy of a certificate of insurance, a certificate of authority to self-insure issued by the commission, or a coverage agreement (TWCC-81, TWCC-82, TWCC-83, or TWCC-84), showing statutory workers' compensation insurance coverage for the person's or entity's employees providing services on a project, for the duration of the project.

Duration of the project – includes the time from the beginning of the work on the project until the contractor's/person's work on the project has been completed and accepted by the governmental entity.

Persons providing services on the project ("subcontractor" in §406.096) – includes all persons or entities performing all or part of the services the contractor has undertaken to perform on the project, regardless of whether that person contracted directly with the contractor and regardless of whether that person has employees. This includes, without limitation, independent contractors, subcontractors, leasing companies, motor carriers, owner-operators employees of any such entity, or employees of any entity which furnishes persons to provide services on the project. "Services" include, without limitation, providing,

hauling, or delivering equipment or materials, or providing labor, transportation, or other service related to a project. "Services" does not include activities unrelated to the project, such as food/beverage vendors, office supply deliveries, and delivery of portable toilets.

B. *The contractor shall provide coverage, based on proper reporting of classification codes and payroll amounts and filing of any coverage agreements, which meets the statutory requirements of Texas Labor Code, Section 401.011 (44) for all employees of the contractor providing services on the project, for the duration of the project.*

C. *The Contractor must provide a certificate of coverage to the governmental entity prior to being awarded the contract*

D. *If the coverage period shown on the contractor's current certificate of coverage ends during the duration of the project, the contractor must, prior to the end of the coverage period, file a new certificate of coverage with the governmental entity showing that coverage has been extended.*

E. *The contractor shall obtain from each person providing services on a project, and provide to the governmental entity:*

(1) *a certificate of coverage, prior to that person beginning work on the project, so the governmental entity will have on file certificates of coverage showing coverage for all persons providing services on the project; and*

(2) *no later than seven days after receipt by the contractor, a new certificate of coverage showing extension of coverage, if the coverage period shown on the current certificate of coverage ends during the duration of the project.*

F. *The contractor shall retain all required certificates of coverage for the duration of the project and for one year thereafter.*

G. *The contractor shall notify the governmental entity in writing by certified mail or personal delivery, within 10 days after the contractor knew or should have known of any change that materially affects the provision of coverage of any person providing services on the project.*

H. The contractor shall post on each project site a notice, in the text, form and manner prescribed by the Texas Workers' Compensation Commission, informing all persons providing services on the project that they are required to be covered, and stating how a person may verify coverage and report lack of coverage.

I. the contractor shall contractually require each person with whom it contracts to provide services on a project, to:

(1) provide coverage, based on proper reporting of classification codes and payroll amounts and filing of any coverage agreements, which meets the statutory requirements of Texas Labor Code, Section 401.011(44) for all of its employees providing services on the project, for the duration of the project;

(2) provide to the contractor, prior to that person beginning work on the project, a certificate of coverage showing that coverage is being provided for all employees of the person providing services on the project, for the duration of the project;

(3) provide the contractor, prior to the end of the coverage period, a new certificate of coverage showing extension of coverage, if the coverage period shown on the current certificate of coverage ends during the duration of the project;

(4) obtain from each other person with whom it contracts, and provide the contractor;

(A) a certificate of coverage, prior to the other person beginning work on the project; and

(B) a new certificate of coverage showing extension of coverage, prior to the end of the coverage period, if the coverage period shown on the current certificate of coverage ends during the duration of the project;

(5) retain all required certificates of coverage on file for the duration of the project and for one year thereafter;

(6) notify the governmental entity in writing by certified mail or personal delivery, within 10 days after the person knew or should have known, of any change that materially affects the provision of coverage of any person providing services on the project; and

(7) contractually require each person with whom it contracts, to perform as required by paragraphs (1)-(7), with the certificates of coverage to be provided to the person for whom they are providing services.

J. By signing this contract or providing or causing to be provided a certificate of coverage, the contactor is representing to the governmental entity that all employees of the contractor who will provide services on the project will be covered by workers' compensation coverage for the duration of the project, that the coverage will be based on proper reporting of classification codes and payroll amounts, and that all coverage agreements will be filed with the appropriate insurance carrier or, in the case of a self-insured, with the commission's Division of Self-Insurance Regulation. Providing false or misleading information may subject the contractor to administrative penalties, criminal penalties, civil penalties, or other civil actions.

K. The contractor's failure to comply with any of these provisions is a breach of contract by the contractor which entitles the governmental entity to declare the contract void if the contractor does not remedy the breach within ten days after receipt of notice of breach from the governmental entity.

(d) A contractor shall:

(1) provide coverage for its employees providing services on a project, for the duration of the project based on proper reporting of classification codes and payroll amounts and filing of any coverage agreements;

(2) provide a certificate of coverage showing workers' compensation coverage to the governmental entity prior to beginning work on the project;

(3) provide the governmental entity, prior to the end of the coverage period, a new certificate of coverage showing extension of coverage, if the coverage period shown on the contractor's current certificate of coverage ends during the duration of the project;

(4) obtain from each person providing services on a project, and provide to the governmental entity:

(A) a certificate of coverage, prior to that person beginning work on the project, so the governmental entity will have on file certificates of coverage showing coverage for all persons providing services on the project; and

(B) no later than seven days after receipt by the contractor, a new certificate of coverage showing extension of coverage, if the coverage period shown on the current certificate of coverage ends during the duration of the project;

(5) retain all required certificates of coverage on file for the duration of the project and for one year thereafter;

(6) notify the governmental entity in writing by certified mail or personal delivery, within ten days after the contractor knew or should have known, of any change that materially affects the provision of coverage of any person providing services on the project;

(7) post a notice on each project site informing all persons providing services on the project that they are required to be covered, and stating how a person may verify current coverage and report failure to provide coverage. This notice does not satisfy other posting requirements imposed by the Act or other commission rules. This notice must be printed with a title in at least 30 point bold type and text in at least 19 point normal type, and shall be in both English and Spanish and any other language common to the worker population. The text for the notices shall be the following text provided by the commission on the sample notice, without any additional words or changes.

"REQUIRED WORKERS' COMPENSATION COVERAGE"

"The law requires that each person working on this site or providing services related to this construction project must be covered by workers' compensation insurance. This includes persons providing, hauling, or delivering equipment or materials, or providing labor or transportation or other service related to the project, regardless of the identity of their employer or status as an employee."

"Call the Texas Workers' Compensation Commission at 512-440-3789 to receive information on the legal requirement for coverage, to verify whether your employer has provided the required coverage, or to report an employer's failure to provide coverage."

(8) contractually require each person with whom it contracts to provide services on a project to:

(A) provide coverage based on proper reporting of classification codes and payroll amounts and filing of any coverage agreements for all of its employees providing services on the project, for the duration of the project;

(B) provide a certificate of coverage to the contractor prior to that person beginning work on the project;

(C) include in all contracts to provide services on the project the language in subsection (e)(3) of this section;

(D) provide the contractor, prior to the end of the coverage period, a new certificate of coverage showing extension of coverage, if the coverage period shown on the current certificate of coverage ends during the duration of the project;

(E) obtain from each other person with whom it contracts, and provide to the contractor:

(i) a certificate of coverage, prior to the other person beginning work on the project; and

(ii) prior to the end of the coverage period, a new certificate of coverage showing extension of the coverage period, if the coverage period if the coverage period shown on the current certificate of coverage ends during the duration of the project;

(F) retain all required certificates of coverage on file for the duration of the project and for one year thereafter;

(G) notify the governmental entity in writing by certified mail or personal delivery, within ten days after the person knew or should have known, of any change that materially affects the provision of coverage of any person providing services on the project; and

(H) contractually require each other person with whom it contracts, to perform as required by subparagraph (A)-(H) of this paragraph, with the certificate of coverage to be provided to the person for whom they are providing services.

(e) A person providing services on a project, other than a contractor, shall:

(1) provide coverage for its employees providing services on a project, for the duration of the project based on proper reporting of classification codes and payroll amounts and filing of any coverage agreements;

(2) provide a certificate of coverage as required by its contract to provide services on the project, prior to beginning work on the project;

(3) have the following language in its contract to provide services on the project: "By signing this contract or providing or causing to be provided a certificate of coverage, the person signing this contract is representing to the governmental entity that all employees of the person signing this contract who will provide services on the project will be covered by workers' compensation coverage for the duration of the project, that the coverage will be based on proper reporting of classification codes and payroll amounts, and that all coverage agreements will be filed with the appropriate insurance carrier or, in the case of a self-insured, with the commission's Division of Self-Insurance Regulation. Providing false or misleading information may subject the contractor to administrative penalties, criminal penalties, civil penalties, or other actions."

(4) provide the person for whom it is providing services on the project, prior to the end of the coverage period shown on its current certificate of coverage, a new certificate showing extensions of coverage, if the coverage period shown on the certificate of coverage ends during the duration of the project:

(5) obtain from each person providing services on a project under contract to it, and provide as required by its contract:

(A) a certificate of coverage, prior to the other person beginning work on the project; and

(B) prior to the end of the coverage period, a new certificate of coverage showing extensions of the coverage period, if the coverage period shown on the current certificate of coverage ends during the duration of the project;

(6) retain all required certificates of coverage on file for the duration of the project and for one year thereafter;

(7) notify the governmental entity in writing by certified mail or personal delivery, of any change that materially affects the provision of coverage of any person providing services on the project and send the notice within ten days after the person knew or should have known of the change; and

(8) contractually require each other person with whom it contracts to:

(A) provide coverage based on proper reporting of classification codes and payroll amounts and filing of any coverage agreements for all of its employees providing services on the project, for the duration of the project;

(B) provide a certificate of coverage to it prior to that other person beginning work on the project:

(C) include in all contracts to provide services on the project the language in paragraph (3) of this subsection;

(D) provide, prior to the end of the coverage period, a new certificate of coverage showing extension of the coverage period, if the coverage period shown on the current certificate of coverage ends during the duration of the project;

(E) obtain from each other person under contract to it to provide services on the project, and provide as required by its contract;

(i) a certificate of coverage, prior to the other person beginning work on the project; and

(ii) prior to the end of the coverage period, a new certificate of coverage showing extension of the coverage period, if the coverage period shown on the current certificate of coverage ends during the duration of the contract;

(F) retain all required certificates on file for the duration of the project and for one year thereafter;

(G) notify the governmental entity in writing by certified mail or personal delivery, within ten days after the person knew or should have known, of any change that materially affects the provision of coverage of any person providing services on the project; and

(H) contractually require each person with whom it contracts, to perform as required by this subparagraph and subparagraphs (A)-(G) of this paragraph, with the certificates of coverage to be provided to the person for whom they are providing services.

(f) If any provision of this rule or its application to any person or circumstance is held invalid, the invalidity does not affect other provisions or applications of this rule that can be given effect without the invalid provision or application, and to this end the provision of this rule declared to be severable.

(g) This rule is applicable for building or construction contracts advertised for bid by a governmental entity on or after September 1, 1994. This rule is also applicable for those building or construction contracts entered into on or after September 1, 1994, which are not required by law to be advertised for bid.

(h) The coverage requirement in this rule does not apply to motor carriers who are required pursuant to Texas Civil Statutes, Article 667c, to register with the Texas Department of Transportation and who provide accidental insurance overage pursuant to Texas Civil Statutes 667c, §4(j).

(i) The coverage requirement in this rule does not apply to sole proprietors, partners, and corporate officers who meet the requirements of the Act, §406.097(c), and who are explicitly excluded from coverage in accordance with the Act, §406.097(a) (as added by House Bill 1089, 74th Legislature, 1995, §1.20). This subsection applies only to sole proprietors, partners, and corporate executive officers who are excluded from coverage in an insurance policy or certificate of authority to self-insure that is delivered, issued for delivery, or renewed on or after January 1, 1996.

The provisions of this §110.110 adopted to be effective September 1, 1994, 19 TexReg 5715; amended to be effective November 6, 1995, 20 TexReg 8609.

Insurance

The Contractor shall not commence work under this contract until he has obtained all the insurance required under the paragraph and such insurance has been approved by owner.

a. Compensation Insurance: The Contractor shall procure and shall maintain during the life of this contract Worker's Compensation Insurance as required by the State of Texas for all of his employees to be engaged in work at the site of the project under this contract and, in case of any such work sublet, the Contractor shall require the subcontractor similarly to provide Worker's Compensation Insurance for all of the employees to be engaged In such work unless such employees are covered by the protection afforded by the Contractor's Worker's Compensation Insurance.
b. Contractor's Public Liability and Property Damage Insurance and Vehicle Liability Insurance: The Contractor shall procure and shall maintain during the life of this contract Contractor's Public Liability Insurance, Contractor's Property Damage Insurance and Vehicle Liability Insurance in the following amounts:
    1. Contractor's Public Liability Insurance: $1,000,000.00
    2. Contractor's Property Damage Insurance: $1,000.000.00
    3. Vehicle Liability Insurance: $1,000,000.00
c. Proof of Insurance: The Contractor shall furnish the Owner with certificates showing the type, amount, class of operations covered, effective dates and date of expiration of policies. Such certificates shall also contain substantially the following statement: "The insurance covered by this certificated will not be canceled or materially altered, except after ten (10) days written notice has been received by the Owner."

Bid Bond

A bid bond in the amount of 5% of the Bid issued by an acceptable surety shall be submitted with each bid. A certified check or Bond Draft payable to the Grant Recipient or negotiable U.S. Government Bonds (as per value) may be submitted in lieu of the Bid Bond.

Performance and Payment Bond

A Performance Bond is require if the contract is in excess of $100,000; and a Payment Bond is require if the contract is in excess of $25,000; all prime contractors which enter into a formal contract with the State, any department, board, agency, municipality, county, school district or any division or subdivision.

The failure of the successful bidder to execute the agreement and supply the required bonds within ten (10) days after the prescribed forms are presented for signature, or within such extended period as the Grant Recipient may grant, shall constitute a default and the Grant Recipient may, at its option either award the contract to next lowest responsible bidder, or re-advertise for bids. In either case, the Grant Recipient may charge against the bidder the difference between the amount of the bid, and the amount for which a contract is subsequently executed irrespective of whether this difference exceeds the amount of the bid bond. If a more favorable bid is received through re-advertisement, the defaulting bidder shall have no claim against the Grant Recipient for a refund.

BOND INSTRUCTIONS

These forms shall be used for construction work or the furnishing of supplies or services, whenever a Performance, Payment or Bid Bond is required. There shall be no deviations from the forms except as authorized by the **COUNTY OF WEBB**.

The Surety on the Bonds must be an AAA rated corporation authorized and admitted to do business in the State of Texas, licensed by the State of Texas to issue Surety bonds, and acceptable to the **COUNTY OF WEBB**. If the amount of the Bond is in excess of ten percent (10%) of the Surety's capital and surplus, the Surety must provide to **COUNTY OF WEBB** written certification from the State Board of Insurance that the Surety has reinsured the portion of the risk that exceeds ten percent (10%) of the Surety's capital and surplus with one or more reinsurers who are duly authorized, accredited or trusted to do business in the State of Texas. If any portion of the Surety's obligation is reinsured, the amount reinsured may not exceed ten percent (10%) of the reinsurer's capital and surplus, and the Surety and the reinsurer shall provide any additional information or documentation required by **COUNTY OF WEBB**.

The full individual, partnership or corporate name, and business or residence address of each party to the Bond shall be inserted in the space provided therefor, and each such party shall sign the Bond individually or in his representative capacity, as appropriate. If the Principal is an individual, the words "Individually and as Co-Partner" shall be stricken out prior to execution.

If the Principals are partners, their individual names shall appear in the space provided therefor, with the recital that they are partners composing a firm, naming it, and all the members of the firm shall execute the Bonds as individuals and as co-partners.

If the Principal or Surety is a corporation, the name of the state in which it is incorporated shall be inserted in the space provided therefor, and said instrument shall be executed and attested under the corporate seal as indicated in the form. If the corporation has no corporate seal, then the fact shall be stated.

The official character and authority of the person or persons executing the Bond of the Principal, if a corporation, shall be certified by the Secretary or Assistant Secretary, according to the form herein provided. In lieu of such certificate there may be attached to the Bond copies of so much of the records of the corporation as will show the official character and authority of the officer signing, duly certified by the Secretary or Assistant Secretary, under the Corporate seal, to be true copies.

THE DATE OF THE BOND MUST NOT BE PRIOR TO THE DATE OF THE INSTRUMENT IN CONNECTION WITH WHICH IT IS GIVEN.

BID BOND

(NOTE: See Instructions for completion of this bond.)

DATE BOND EXECUTED

_____

PRINCIPAL

_____

SURETY

_____

PENAL SUM OF BOND (express in words and figures)

_____

_____

DATE OF BID

_____

KNOW ALL MEN BY THESE PRESENTS: That we, the PRINCIPAL and SURETY above named, are held and firmly bound unto the Housing Authority of the City of Laredo, hereinafter called the Owner, in the penal sum of the amount stated above, for the payment of which sum well and truly to be made, we bind ourselves, our heirs, executors, administrators, and successors, jointly and severally, firmly by these presents.

THE CONDITION OF THIS OBLIGATION IS SUCH, that Whereas the Principal has submitted the accompanying bid, dated as shown above, for

_____

NOW, THEREFORE, if the Principal shall not withdraw said bid within the period specified therein after the opening of the same, and shall within the period specified therefore, or, if no period be specified, within ten (10) days after the prescribed forms are presented to him for signature, execute such further contractual documents, if any, as may be required, for the faithful performance and proper fulfillment of the resulting contract, and for the protection of all persons supplying labor and material in the prosecution of the work provided for in such contract, or in the event of the withdrawal of said bid within the period specified, or the failure to enter into such contract and give such bonds within the time specified, if the Principal shall pay the Owner the difference between the amount specified in said bid and the amount for which the Owner may procure the required work, supplies, and service, if the latter amount be in excess of the former, than the above obligation shall be void and of no effect, otherwise to remain in full force and virtue.

IN WITNESS WHEREOF, the above-bounded parties have executed this instrument under their several seals on the date indicated above, the name and corporate seal of each corporate party being hereto affixed and these presents duly signed by its undersigned representative, pursuant to authority of its governing body.

IN PRESENCE OF:

Witness		Individual Principal	
1. _____	as to	_____ Individual and as Co-Partner	(SEAL)
2. _____	as to	_____ Individual and as Co-Partner	(SEAL)
3. _____	as to	_____ Individual and as Co-Partner	(SEAL)
4. _____	as to	_____ Individual and as Co-Partner	(SEAL)

Attest:

Corporate Principal

_____

_____
Business Address

AFFIX

CORPORATE
_____ By _____ (SEAL)

_____
Title

Attest:

Corporate Surety

_____

_____
Business Address

AFFIX

CORPORATE
_____ By _____ (SEAL)

_____
Title

PERFORMANCE BOND

Surety Bond No. _____

STATE OF TEXAS)(

KNOW ALL MEN BY THESE PRESENTS:

COUNTY OF WEBB)(

SURETY _____

That we, _____ as Principal, and _____ as Surety are hereby held in firmly bound unto the Housing Authority of the City of Laredo in the penal sum of _____ for payment whereof, the said Principal and Surety bind themselves, their heirs, executors, administrators, and successors, jointly and severally, firmly by these presents.

The conditions of this obligation are such that whereas the Principal entered into a certain Contract, hereto attached, and made a part hereof, with the Housing Authority of the City of Laredo, acting by and through the Board of Trustees of the Housing Authority of the City of Laredo, dated _____, for the _____ _____.

NOW, THEREFORE, the condition of this obligation is such that, if the Principal shall faithfully perform the Contract in accordance with the Plans and Specifications and Contract Documents, and shall fully indemnify and save harmless the Housing Authority of the City of Laredo from all cost and damage which the Housing Authority of the City of Laredo may suffer by reason of Administrator's default or failure to do so and shall fully reimburse and repay the Housing Authority of the City of Laredo all outlay and expense which the Housing Authority of the City of Laredo may incur in making good any such default, then this obligation shall be null and void, otherwise it shall remain in full force and effect.

In the event Principal is in default under the Contract as defined herein, Surety will within fifteen (15) days of determination of such default take over and assume completion of said Contract and become entitled to the payment of the balance of the Contract Price, or the Surety shall make other arrangements satisfactory with the Obligee for the completion of the defaulted work but in no event shall the Surety's liability exceed the penalty of this bond.

Provided further, that if any legal action be filed upon this bond, venue shall lie in Webb County, State of Texas, and that the said Surety, for value received, hereby stipulates and agrees that no change, extension of time, alteration or addition to the terms of the Contract, or to the work to be performed thereunder, or the Specifications accompanying the same, shall in anyway affect its obligation on this bond, and it does hereby waive notice of any such change, extension of time, alteration or addition, to the terms of the Contract or to the work or to the Specifications.

IN WITNESS WHEREOF, the above-bound parties have executed this instrument under their several seals this _____ day of _____, 201 ___, the name and corporate seal of each corporate party being hereto affixed and these presents duly signed by its undersigned representative, pursuant to authority of its governing body.

SEAL:

_____
PRINCIPAL

Attest: By _____

_____ _____
SURETY

By _____

_____

NOTE: **Fully identify name of Surety Agent, Address, Telephone Number, and attach Power of Attorney.**

PAYMENT BOND

Surety Bond No. _____

STATE OF TEXAS)(

KNOW ALL MEN BY THESE PRESENTS:

COUNTY OF WEBB)(

SURETY

_____

That we, _____
as Principal, and

_____
as Surety are hereby held in firmly bound unto COUNTY OF WEBB in the penal sum of
_____ for
payment whereof, the said Principal and Surety bind themselves, their heirs, executors, administrators, and successors, jointly and severally, firmly by these presents.

The conditions of this obligation are such that whereas the Principal entered into a certain Contract, hereto attached, and made a part hereof, with the COUNTY OF WEBB, acting by and through the Board of Trustees of the COUNTY OF WEBB dated _____, for the
_____.

NOW, THEREFORE, the condition of this obligation is such that, if the Principal shall promptly make payments to all claimants as defined in Article 5160, Revised Civil Statutes of Texas, 1925, as amended, supply labor and materials in the prosecution of the work provided for in said Contract, then this obligation shall be null and void, otherwise it shall remain in full force and effect.

This bond is made and entered into solely for the protection of all claimants supplying labor and material in the prosecution of the work provided for in said Contract, and all such claimants shall have a direct right of action under the bond as provided in Article 5160, Revised Civil Statutes, 1925, as amended.

IN WITNESS WHEREOF, the above-bound parties have executed this instrument under their several seals this _____ day of _____, 201 ___, the name and corporate seal of each corporate party being hereto affixed and these presents duly signed by its undersigned representative, pursuant to authority of its governing body.

SEAL: _____
PRINCIPAL

Attest: By _____

_____ _____
SURETY

By _____

NOTE: Fully identify name of Surety Agent, Address, Telephone Number, and attach Power of Attorney.

DIVISION 0: BID REQUIREMENTS

0300 INFORMATION FOR BIDDERS

1. RECEIPT AND OPENING OF BIDS:

The County of Webb, [hereinafter called "Owner"] invites BIDDERS to Bid on the form attached hereto, all blanks of which must be appropriately filled in. BIDS will be received by the Owner no later than date and time given below, and publicly opened and read aloud. The envelope containing the BID must be sealed and addressed as shown below.

PROJECT: **"WEBB COUNTY-REMODELING & ADDITIONS TO JUSTICE OF THE PEACE, PRECINCT 4 – COURT BUILDING"**

BID OPENING DATE & TIME: July 2, 2012 at 2:00 P.M.

PLACE OF BID OPENING:
WEBB COUNTY CLERK'S OFFICE
WEBB COUNTY JUSTICE CENTER
WEBB COUNTY CLERK'S OFFICE
1110 VICTORIA, ST. SUITE 201
SECOND FLOOR
LAREDO, TEXAS 78042

ADDRESS BID ENVELOPE AS FOLLOWS: As Required by Notice to Bidders:

The *Owner* may consider informal any BID not prepared and submitted in accordance with the provisions hereof and may waive any formalities or reject any or all BIDS. Any bid withdrawn prior to the above scheduled time for the opening of bids or authorized postponement thereof shall not be considered. Any BIDS received after the time and date specified shall not be considered. No Bidder may withdraw a bid within 60 days after the actual date of the opening thereof.

2. PREPARATION OF BID:

Each Bid must be submitted on the herein attached "Bid Form". All blank spaces for Bid priced must be filled in ink or typewritten, in both words and figures. Each Bid must be submitted in a sealed envelope as specified in the Information to bidder.

3. ITEMS REQUIRED FOR BID:

A. Bid Form	B. Bid Bond
C. Conflict of Interest Questionnaire	D. Proof No Delinquent Taxes Owned to Webb County
E. Bidder Information	F. List of Sub-Contractors
G. Sealed Bid Checklist	H. Contractor's Qualifications (AIA Doc. A305)

4. SUBCONTRACTS:

The Bidder is specifically advised that any person, firm, or other party to whom it is proposed to award a subcontract under this contract must be acceptable to the owner.

5. INVESTIGATIONS:

The owner may make such investigations as he deems necessary to determine the ability of the Bidder to perform the work, and the Bidder shall furnish the owner all such information and dates for this purpose as the owner may request. The owner reserves the right to reject any Bid if the evidence submitted by, or

investigated of such Bidder fails to satisfy the owner that such Bidder is properly qualified to carry out the obligations of the contract and to complete the work contemplated therein. Conditional Bids will not be accepted.

7. BID SECURITY:

Each Bid must be accompanied by certified check of Bidder, or a Bid bond prepared on the form of Bid bond attached hereto, duly executed by the bidder as principal and having as surety thereon a surety company approved by the Owner, in the amount of 5% of the bid. Such cash, checks or bid bonds will be returned promptly after the Owner and the accepted bidder have executed the contract, or if no award, has not been made within 45 days after the date of the opening of the Bidder at any time thereafter so long as he has not been notified of the acceptance of his bid.

8. LIQUIDATED DAMAGES FAILURE TO ENTER INTO CONTRACT:

The successful bidder, upon his failure or refusal to execute and deliver the contract and bonds required within 10 days after he has received notice of acceptance of his bid, shall forfeit to the Owner, and liquidated damages for such failure or refusal, the security deposited with his Bids.

9. LIQUIDATED DAMAGES:

Bidder must agree to commence work on or before a date specified in a written "Notice to Proceed", issued by the owner, and to fully complete the project within the time. Bidder agrees to pay as the liquidated damages, the sum of $350.00 for each consecutive calendar day of delay until work is completed and accepted. Delays because of strikes, fire, weather, or any cause beyond the contractors control shall be granted, but claims for extension shall be in written form within a reasonable time after the occurrence.

10. TIME OF COMPLETION:

Bidder must agree to commence work on or before a date to be specified in written "Notice to Proceed" of the owner, and to fully complete the project within the time stated on the bid.

11. CONDITIONS OF WORK:

Each Bidder must visit the site, inspect the building and inform himself fully of the conditions relating to the construction of the project and the employment of the labor thereon. Failure to do so will not relieve a successful Bidder of his obligations to furnish all materials and labor necessary to carry out the provisions of this contract. Insofar as possible the contractor, in carrying out the work, must employ such methods or means as will not cause any interruption of or interference with the work of any contractor and the continued operation of the building.

12. ADDENDA AND INTERPRETATIONS:

No interpretation of the meaning of the plans, specifications or other pre-bid documents will be made to any of the bidders orally. Every request for such interpretation should be in writing addressed to Architects Plus, Inc., 101 Merlin Rd. Laredo TX. 78041, and to be given consideration must be received at least five days prior to the dated fixed for the opening of bids. Any and all such interpretations and any supplemental instructions will be mailed to the respective addresses furnished for such purpose. Failure of any bidder to receive any such addendum or interpretation shall not relieve such bidder from any obligations under his bid as submitted. All addenda so issued shall become part of the contract documents.

13. PERFORMANCE/ PAYMENT BOND:

Simultaneously with his delivery of the executed contract, the contractor shall furnish Performance and Payment Bonds for the performance of this contract and for the payment of all persons performing labor on the project as specified in the General Conditions and as described in NOTICE TO BIDDERS. The surety company shall be licensed in the state of Texas and A.M. Best, "AAA" rated.

14. POWER OF ATTORNEY:

Attorney-in-fact who signs bid bonds or contract bonds must file with each bond a certified and effectively dated copy of their power of attorney.

15. NOTICE OF SPECIAL CONDITIONS:

Attention is particularly called to those parts of the contract documents and specifications that deal with the following:

a: Inspections and testing of materials
b: Insurance requirements. [Refer to Terms and Conditions of Invitations for Bids]

18. LAWS AND REGULATIONS:

The bidder's attention is directed to the fact that all applicable state laws, municipal ordinances, and the rules and regulations of all authorities having jurisdiction over construction of the project shall apply to the contract throughout, and they will be deemed to be included in the contract the same as though herein written out in full

17. METHOD OF AWARD:

The owner reserves the right to select the lowest responsible bidder. The project bid shall be determined by combining the base bid and any alternate selected by the owner [additive and deductive]. If there are several areas of work, the owner reserves the right to select one or more contractors for each work [re: to Bid Form break down]. This process, the selection process, interpretations, and procedures for award shall be consistent with the State of Texas procurement code. The owner may discuss bids with Bidders, after bids have been opened to allow for clarification and changes without disclosing that information to the other Bidders in an effort to select the Bid representing the best value to the owner. The owner may also discuss options of cost reduction. If the owner is unable to reach a contract agreement with the selected Bidder, the owner shall terminate further discussions and proceed to the next Bidder in the order of selection ranking until a contract agreement is reached or all bids are rejected.

18. OBLIGATION OF BIDDER:

At the time of the opening of bids, each Bidder will be presumed to have inspected the site and to have read and be thoroughly familiar with the plans and contract documents [including all addenda]. The failure or omission of any form instrument or document shall in no way relieve any bidder from any obligation with respect of his bid.

19. CONTRACT AGREEMENT FORM:

The AIA agreement between owner and contractor shall be on AIA Document A-101, and shall be prepared by the architect and executed by the successful bidder after Notice of Acceptance of his bid by the owner.

20. GENERAL CONDITIONS:

The General Conditions of the Contract for Construction, AIA Document A201 [latest edition], is hereby made a part of these specifications to the same extent as if bound in their entirety herein. A complete copy of the General conditions may be obtained from the architect at a cost of $5.00 per copy. A reference copy may be examined at the architect's office at no charge.

21. INSURANCE REQUIREMENTS:

The contractor shall not commence work under this contract until he has obtained all the insurance required hereunder and certificates of such insurance have been filed and approved by the owner. The contractor shall not allow any subcontractor to commence work until similar insurance requirements have been obtained from the subcontractor and their employees, and approved by the owner. Approval of the insurance by the owner shall not relieve or decrease the liability of the contractor. The contractor shall provide and maintain, until the work covered in this contract is completed and accepted by the owner, the minimum insurance as follows:

TYPE OF COVERAGE LIMITS OF LIABILITY

A.	Workmen's Compensation Insurance	Statutory
B.	Contractor's Public Liability Insurance	$1,000,000.00
C.	Contractor's Property Damage Insurance	$1,000,000.00
D.	Contractor's Vehicle Liability Insurance	$1,000,000.00
E.	Owner's and Architects' Protection Liability Insurance	as indicated above

F. Fire and Extended Coverage Insurance: The Contractor shall insure the building or other work included in this contract against loss or damage by fire, and against loss or damage covered by standard extended coverage insurance endorsement, on an insurance or companies acceptable to the Owner, the amount of the insurance or companies acceptable to the Owner, the amount of the insurance at all times to be at least equal to the amount paid on account of work and materials and plus the value of the work or materials furnished or delivered but not yet paid for by the Owner. The policies shall be in the names of the owner and the contractor, as their interests may appear, and certificates of the insurance company as to the amount and type of coverage, terms of policies, etc., shall be delivered to the Owner before monthly partial payments are made. The policy shall provide for the inclusion of the names of all other contractors, subcontractors and others employed on the premises as insured, and shall stipulate that the insurance companies shall have no right of subrogation against any contractors, subcontractors, and others employed on the premises for any work, building alterations, construction or erection to the described property.

G. Builder's Risk: The Contractor shall take out an all-risk policy which covers loss of materials by theft, vandalism, malicious mischief, or other loss, whether materials are incorporated into the work or not.

END OF SECTION 0300

0400 - AIA Documents

A-101 Agreement Between Owner and Contractor
A-201 General Conditions of the Contract for Construction
A-305 Contractor's Qualification Statement
A-310 Bid Bond
A-311 Performance Bond/Labor and Material Payment Bond

The above referenced documents are hereby made a part of these Specifications. These documents may be obtained from the Architect at the cost of $15.00 per set. Reference copies are available far inspection at the Office of the Architect at no charge. These documents are made part of these specifications to the same extent as if bound in their entirety herein.

END OF SECTION 0400

SUPPLEMENTAL INSTRUCTIONS TO BIDDERS

1. Coordinate all work and provide a minimum 2 days advanced notice to the owner on any work affecting the safety (heat, cold, rain, structural integrity, noise, odor, trenching, materials. equipment, etc.), the security (downed alarm systems, building left open after hours, etc.), utility disconnections, and downed communication systems. The contractor shall be responsible for all safety barricades, barriers, structural supports, security, utilities, and communication for the owner, its occupants, adjacent buildings, and building contents.

2. If the Owner **will** occupy the site and the existing building during the period of construction, cooperate fully with the Owner or his representative during construction operations to minimize conflicts and to facilitate Owner usage. Perform the work so as not to interfere with the Owners operations. (Provide access to employees and emergency vehicles at all times). .

3. Contractor shall salvage all items that are in good working order and deliver them to the Owner. Owner shall retain possession of the following items: * Cabinets, * Faucets, * Copper wire, * Lavatories, *Doors, * Door hardware, (hinges, locksets, etc.) *Electrical breaker boxes, *Electrical Conduit, * Other salvaged items. Owner may decide, depending on conditions, not to salvage some items.

4. Contractor may reuse salvaged items as designated in plans end specifications.

5. All debris and non-salvaged items **SHALL** become the property of the contractor. Debris and non-salvaged items shall be removed and taken to the City Dump on a daily basis. The entire area shall be kept clean continually.

6. Workmen shall enter only those areas of the building requiring work. Confine operations at the site to areas permitted. Portions of the site beyond areas on which work is indicated are not to be disturbed.

7. Store all owner/contractor equipment & materials in a safe and secured area - "these shall be the contractor's responsibility.

8. The Contractor **SHALL NOT** remove any more of the existing wall/roof than can be properly protected/completed on the same day. Maintain the existing building in a safe and weather tight condition throughout the construction period. A pre-construction coordination meeting shall be scheduled before beginning any portion of the work that may encumber the Owner's continued use of the facility.

9. Take all precautions necessary to protect the building, the contents, and its occupants during the construction period. Any damages caused by the Contractor or his Sub's, or damages caused by acts of nature due to the negligence or bad judgment of the contractor, during the construction phase shall be paid for by the contractor.

10. Lock automobile type vehicles and other mechanized or motorized construction equipment, when parked and unattended. Do not leave vehicles or equipment unattended with the motor running or ignition key in place.

11. All project details and installation methods whether shown or not shown shall comply with standard practices and details as published by the latest building trades (concrete. masonry, steel. carpentry, roofing, etc.) latest edition manuals and all governing authorities having jurisdiction.

12. The prime contractor will be responsible for the material and workmanship of himself and all the subcontractors. Workmanship that is not professional to specifications, codes, or acceptable to the owner / architect would not be accepted. Unacceptable work or materials will be removed and replaced with acceptable ones and paid for by the prime contractor. If there is no prime contractor, then it will be the subcontractor's responsibility.

13. Safety: The safety of the building occupants, its staff, and the contractor's work force and subcontractors shall be the responsibility of the prime contractor. The prime contractor shall erect barricades [chain link fencing, overhead protected accesses, bridges with railings, etc.) around the work area as needed to insure safety.

TREATED LUMBER: All lumber used for fascias, fascia blocking, nailers, exposed lumber, or lumber in contact with masonry/concrete walls slabs shall be treated lumber (unless otherwise noted on drawings).

EXISTING LOOSE LUMBER: On alterations / additions nail all loose existing lumber (fascias, soffits, nailers, metal trims, etc.) and provide any blocking as required.

A/C CONDENSATION LINES: If missing, provide new ¾" PVC line to a roof drain or over roof edge. If damaged, repair with same. Route lines to roof drain or scupper at roof edge.

Galvanized Metal Sleepers: Provide new for all A/C condensation lines and for metal conduits or pipes.

END OF SECTION 0500

BID FORM

Bidder/Contractor: _____ at _____.

To Owner: County of Webb
1110 Victoria Street
Laredo, Texas 78040

Project: **"WEBB COUNTY-REMODELING & ADDITIONS TO JUSTICE OF THE PEACE, PRECINCT 4 – COURT BUILDING"**

Gentlemen:

The bidder in compliance with Notice to Bidders for the construction of this project, having examined the plans and specifications with related documents and having examined the site and all conditions affecting the work, hereby proposes to furnish all labor, materials, equipment and service and to construct the project in accordance with Contract Documents for the sum set below.

The work consists of remodeling and constructing the Remodeling of & Additions to the Existing Justice of the Peace, Precinct 4 – Court Building, and includes, slab on grade foundations, wood framing, insulation, new sloped roof, stucco finish, interior work, mechanical, electrical and plumbing and necessary incidentals as may be required for a complete job.

"WEBB COUNTY-REMODELING & ADDITIONS TO JUSTICE OF THE PEACE, PRECINCT 4 – COURT BUILDING"

LUMP SUM - BASE BID:

_____Dollars

($_____)

Time of Completion: _____ consecutive calendar days.

ADDITIVE ALTERNATES

ADDITIVE ALTERNATE NO. 1: "METAL ROOF" Alternate: Remove existing Built-up Roof and insulation to decking, provide new metal roof on metal transverse framing and 9" fiberglass batt insulation, provide finished parapet walls, gutters and downspouts, in lieu of sloped "Duro-Last" roofing system.

ADD:

_____Dollars

($_____)

Time of Completion: _____ consecutive calendar days.

ADDITIVE ALTERNATE NO. 2: " BRICK VENEER" Alternate: Delete metal inset wall panels at new addition. Provide continuous brick veneer masonry.

ADD:

_____Dollars

($_____)

ADDITIVE ALTERNATE NO. 3: "WIDEN HALLWAY" Alternate: Relocate wall at South end of court room, change existing three foot (3') wide hallway to four foot (4') wide hallway. Repair wall, floor and ceiling finishes to match existing to remain. Relocate and re-wire electrical/data outlets and security camera. Modify wood railing, repair stairs and wood trim at raised floor.

ADD:

_____Dollars

($_____)

Time of Completion: _____ consecutive calendar days.

The bidder, if awarded the contract agrees to commence work within ten consecutive calendar days from date of Notice to proceed.

It is understood that if accepted by the Owner, this proposal becomes a part of the contract documents upon signing of this contract.

It is also understood that the Owner reserves the right to reject any or all bids and waive irregularities and formalities or to accept any bids considered advantageous.

The undersigned agrees that he will not withdraw this proposal for a period of thirty (30) days from the date thereof.

Bidder acknowledges the receipt of Addenda No's _____.

Date: _____

Signed:_____

Date: _____

Address:_____

(Seal if bid by Corporation)

ATTENTION CONTRACTOR:

Webb County

Conflict of Interest Disclosure

Effective January 1, 2006, Chapter 176 if the Texas Local Government Code requires that any vendor or person considering doing business with a local government entity disclose in the Questionnaire Form CIQ, the vendor or person's affiliation or business relationship that might cause a conflict of interest with a local government entity. By law, this questionnaire must be filled with the records administrator of Webb County no later than the 7th business day after the date the person becomes aware of facts that require the statement to be filed. See Section 176.006, Local Government Code. A person commits an offense if the person violates Section 176.006, Local Government Code. An offense under this section is a Class C misdemeanor. The questionnaire may be viewed and printed by following the link before:

By submitting a response to this request, the vendor represents that it is in compliance with the requirements of Chapter 176 of the Texas Local Government Code.

The Webb County Officials who come within Chapter 176 of the Local Government Code relating to filing of Conflict of Interest Questionnaire (Form CIQ) include:

1. Webb County Judge Danny Valdez
2. Commissioner Frank Sciaraffa
3. Commissioner Rosaura Tijerina
4. Commissioner Jerry Garza
5. Commissioner Jaime Canales
6. Judge Elma T. Salinas Ender, Chairman, 341st Judicial District
7. Judge Oscar Hale, 406th Judicial District
8. Judge Joe Lopez, 49th Judicial District

Please send completed forms to the Webb County Clerk's Office located at 1110 Victoria, Suite 201, Laredo, Texas 78040.

CONFLICT OF INTEREST QUESTIONNAIRE

FORM CIQ

For vendor or other person doing business with local governmental entity

This questionnaire reflects changes made to the law by H.B. 1491, 80th Leg., Regular Session.

This questionnaire is being filed in accordance with Chapter 176, Local Government Code by a person who has a business relationship as defined by Section 176.001(1-a) with a local governmental entity and the person meets requirements under Section 176.006(a).

By law this questionnaire must be filed with the records administrator of the local governmental entity not later than the 7th business day after the date the person becomes aware of facts that require the statement to be filed. *See* Section 176.006, Local Government Code.

A person commits an offense if the person knowingly violates Section 176.006, Local Government Code. An offense under this section is a Class C misdemeanor.

OFFICE USE ONLY

Date Received

1 **Name of person who has a business relationship with local governmental entity.**

2 ☐ **Check this box if you are filing an update to a previously filed questionnaire.**

(The law requires that you file an updated completed questionnaire with the appropriate filing authority not later than the 7th business day after the date the originally filed questionnaire becomes incomplete or inaccurate.)

3 **Name of local government officer with whom filer has employment or business relationship.**

_____

Name of Officer

This section (item 3 including subparts A, B, C & D) must be completed for each officer with whom the filer has an employment or other business relationship as defined by Section 176.001(1-a), Local Government Code. Attach additional pages to this Form CIQ as necessary.

A. Is the local government officer named in this section receiving or likely to receive taxable income, other than investment income, from the filer of the questionnaire?

☐ Yes ☐ No

B. Is the filer of the questionnaire receiving or likely to receive taxable income, other than investment income, from or at the direction of the local government officer named in this section AND the taxable income is not received from the local governmental entity?

☐ Yes ☐ No

C. Is the filer of this questionnaire employed by a corporation or other business entity with respect to which the local government officer serves as an officer or director, or holds an ownership of 10 percent or more?

☐ Yes ☐ No

D. Describe each employment or business relationship with the local government officer named in this section.

4

_____ _____

Signature of person doing business with the governmental entity Date

Adopted 06/29/2007

PROOF OF NO DELINQUENT TAXES OWED TO WEBB COUNTY

This is to certify that _____ owes no delinquent property taxes to Webb County.

_____ owes no property taxes as a business in Webb County.
(Business Name)

_____ owes no property taxes as a resident of Webb County.
(Business Owner)

_____
Person who can attest to the above information

*** SIGNED DOCUMENT AND PROOF OF NO DELINQUENT OR OWED TAXES TO WEBB COUNTY.**

BIDDER INFORMATION

Name of Company _____

Address: _____

_____

Phone: _____

Email Address: _____

Signature of Person Authorized to Sign Bid:

_____
(Signature)

_____
(Print Name)

_____
(Title)

Bidder to indicate status, as to "Partnership", Corporation", "Sole Proprietorship", etc

_____

Date: _____

Bidder must complete this bid document in its entirety in order for it to be valid.

LIST OF SUB-CONTRACTORS

(To be submitted in a separate envelope with the Bid Proposal)

Owner's Project: **THE COUNTY OF WEBB,**
Remodeling & Additions to the Existing
Justice of the Peace Precinct 4 – Court Building

To: Webb County Judge
Honorable Danny Valdez
THE COUNTY OF WEBB
Laredo, Texas

The undersigned submit the following names of subcontractors to be used in performing the Contract.

SUBCONTRACTORS

1. Concrete _____
2. Structural Steel _____
3. Masonry _____
4. Painting _____
5. Electrical _____
6. Mechanical _____
7. Plumbing _____
8. _____ _____

A complete list of proposed subcontractors and materials suppliers will be required to be submitted to the architect not later than seven (7) days after the Contract date.

STANDARD FORM OF AGREEMENT BETWEEN OWNER AND CONTRACTOR

THIS AGREEMENT is dated as of the _____ day of _____ in the year 2012 by and between The County of Webb (hereinafter called OWNER) and _____(hereinafter called CONTRACTOR).

OWNER AND CONTRACTOR, in consideration of the mutual covenants hereinafter set forth, agree as follows:

Article 1. WORK

CONTRACTOR shall complete all Work as specified or indicated in the Contract Documents. The Work is generally described as follows:

THE COUNTY OF WEBB
Remodeling of & Additions to
Justice of the Peace Precinct 4 – Court Building

General Construction

The Project for which the Work under the Contract Documents may be generally described is as follows:

The work consists of constructing the Remodeling of & Additions to the Existing Justice of the Peace, Precinct 4 – Court Building, and includes, slab on grade foundations, wood framing, insulation, new metal roofing, stucco finish, interior work, mechanical, electrical and plumbing and necessary incidentals as may be required for a complete job.

Article 2. ARCHITECT

The Project has been designed by Architects Plus, Inc., hereinafter called ARCHITECT/ENGINEER and who is to act as OWNER'S representative, assume all duties and responsibilities and have the rights and authority as assigned in the Contract Documents in connection with completion of the Work in accordance with the Contract Documents.

Article 3. CONTRACT TIME

3.1 The Work will be substantially completed within 180 days from the date when the Contract Time commences to run as provided in paragraph 8.2 of the General Conditions, and completed and ready for final payment in accordance with paragraph 9.10 of the General Conditions within 210 days from the date when the Contract Time commences to run.

3.2 Liquidated Damages. OWNER and CONTRACTOR recognize that time is of the essence of this Agreement and that OWNER will suffer financial loss if Work is not completed within the times specified in paragraph 3.1 above, plus any extensions thereof allowed in accordance with Paragraph 8.3 of the General Conditions. They also recognize the delays, expense and difficulties involved in proving in a legal or arbitration proceeding the actual loss suffered by OWNER if the work is not completed on time. Accordingly instead of requiring any such proof, OWNER and CONTRACTOR agree that as liquidated damages for delay (but not as a penalty) CONTRACTOR shall pay OWNER Three Hundred and Fifty Dollars ($350.00) for each day that expires after the time specified in paragraph 9.8 for Substantial Completion until the Work is substantially complete.

Article 4. CONTRACT PRICE

4.1 OWNER shall pay CONTRACTOR for completion of the Work in accordance with the Contract Documents and subject to Change Order as provided in the Contract Documents, the Contract Sum of:

_____(_____).

For purposes of State Tax Exemptions, the following breakdown is submitted:

(1) Labor, overhead, profit: $_____.
(2) Materials to be incorporated into the construction Project: $_____ .

Article 5. PAYMENT PROCEDURES

CONTRACTOR shall submit Applications for Payment in accordance with Article 14 of the General Conditions. Applications for Payment will be processed by ARCHITECT as provided in the General Conditions.

5.1 Progress Payments. OWNER shall make progress payments on account or the Contract Price on the basis of CONTRACTOR'S Applications for Payment as recommended by ARCHITECT, on or about the 15th day of each month during construction as provided below. All progress of the Work measured by the schedule of values established in paragraph 2.9 of the General Conditions or, in the event there is no schedule of values, as provided in the General Conditions.

5.1.1 Prior to Substantial Completion, progress payments will be made in the amount equal to the percentage indicated below, but, in each case, less the aggregate of payments previously made and less such amounts as ARCHITECT shall determine, or OWNER may withhold, in accordance with paragraph 9.5 of the General Conditions.

90% of the Work satisfactorily completed to date of current Application for Payment.

90% of materials and equipment not incorporated in the Work, (but delivered, suitably stored and accompanied by documentation satisfactory to OWNER as provided in paragraph 9.3 of the General Conditions).

5.1.2 Final Payment: Upon Substantial Completion, in amount sufficient to increase total payments to CONTRACTOR TO 95% of the Contract Price, less such amounts as ARCHITECT shall determine, or OWNER may withhold, in accordance with paragraph 9.8 of the General Conditions.

5.2 Final Payment: Upon final completion and acceptance of the Work in accordance with paragraph 9.10 of the General Conditions, OWNER shall pay the remainder of the Contract Price as recommended by ARCHITECT as provided in said paragraph 9.10.

Article 6. INTEREST

All moneys not paid within 30 days after being due the Contractor as provided in Article 9 of the General Conditions shall bear interest at the rate of 5% per annum.

Article 7. CONTRACTOR'S REPRESENTATIONS

The Contractor makes the following representations regarding this Agreement:

7.1 CONTRACTOR has familiarized itself with the nature and extent of the Contract Documents, Work, site, locality, and all local conditions and Laws and Regulations that in any manner may affect cost, progress, performance or furnishing of the Work.

7.2 CONTRACTOR has studied carefully any available reports of explorations and tests of subsurface conditions and drawings of physical conditions which are identified elsewhere in the Instructions to Bidders of the extent of the technical data contained in such reports and drawings upon which CONTRACTOR is entitled to rely.

7.3 CONTRACTOR has obtained and carefully studied (or assumes responsibility for obtaining and carefully studying) all such examinations, investigations, explorations, tests, reports and studies (in addition to or to supplement those referred to in paragraph 7.2 above) which pertain to the subsurface or physical conditions at or contiguous to the site or otherwise may affect the cost, progress, performance or furnishing of the Work as CONTRACTOR considers necessary for the performance or furnishing of the Work at the Contract Price, within the Contract Time and in accordance with the other terms and conditions of the Contract Documents, including specifically the provisions of paragraph 4.2 of the General Conditions, and no additional examinations, investigations, explorations, tests, reports, studies or similar information or data are or will be required by CONTRACTOR for such purposes.

7.4 CONTRACTOR has reviewed and checked all information and data shown or indicated on the Contract Documents with respect to existing Underground Utilities at or contiguous to the site and assumes responsibility for the accurate examinations, investigations, explorations, tests, reports, studies, or similar information or data in respect of said Underground Utilities which are or will be required by CONTRACTOR in order to perform and furnish the Work at the Contract Price, within the Contract Time and in accordance with the other terms and conditions of the Contract Documents.

7.5 CONTRACTOR has given ARCHITECT written notice of all conflicts, errors or discrepancies that he has discovered in the Contract Documents and the written resolution thereof by ARCHITECT is acceptable to CONTRACTOR.

Article 8. CONTRACT DOCUMENTS

The Contract Documents which comprise the entire agreement between OWNER and CONTRACTOR concerning the Work consists of the following:

8.1 This Agreement (pages 1 to 5, inclusive).
8.2 Exhibits to this Agreement.
8.3 Performance and other Bonds.
8.4 Notice of Award.
8.5 General Conditions.
8.6 Supplementary Conditions.
8.7 Specifications
8.8 Drawings (Sheet A1.2).
8.9 Addenda Nos. _____
8.10 Contractor's Bid.
8.11 Documentation submitted by CONTRACTOR prior to Notice of Award.
8.12 Notice to Proceed.
8.13 The following which may be delivered or issued after the Effective Date of the Agreement and are not attached hereto: All Written Amendments and other documents amending, modifying, or supplementing the Contract Documents pursuant to paragraphs 7.2 and 7.3 of the General Conditions.
8.14 The documents listed in paragraphs 8.2 et seq. above are attached to this Agreement (except as expressly noted otherwise above).

There are no Contract Documents other than those listed above in the Article 8. The Contract Documents may only be amended, modified or supplemented as provided in paragraphs 7.2 and 7.3 or the General Conditions.

Article 9. MISCELLANEOUS

9.1 Terms used in this Agreement, which are defined in Article 1 of the General Conditions will have the meanings indicated in the General Conditions.

9.2 No assignment by a part hereto of any rights under or interests in the Contract Documents will be binding on another party hereto without the written consent of the party sought to be bound; and specifically but without limitation moneys that may become due and moneys that are due may not be assigned without such consent (except to the extent that the effect of this restriction may be limited by law), and unless specifically stated to the contrary in any written consent to an assignment no assignment will release or discharge the assignor from any duty or responsibility under the Contract Documents.

9.3 OWNER and CONTRACTOR each binds itself, its partners, successors, assigns and legal representatives to the other party hereto, its partners, successors, assigns and legal representatives in respect of all covenants, agreements and obligations contained in the Contract Documents.

Article 10. OTHER PROVISIONS

IN WITNESS WHEREOF, OWNER, and CONTRACTOR have signed this Agreement in triplicate. One counterpart each has been delivered to OWNER, CONTRACTOR and ARCHITECT. All portions of the Contract Documents have been signed or identified by OWNER and CONTRACTOR or by ARCHITECT on their behalf.

This Agreement will be effective on the _____ day of _____, 20 12 .

OWNER: THE COUNTY OF WEBB

By _____
Honorable Danny Valdez, County Judge

Attest_____

Address for giving notices:

Webb County Justice Center
1110 Victoria St., Suite 201
Laredo, Texas 78042

(Attach evidence of authority to sign and resolution or other documents authorizing execution of Agreement.)

CONTRACTOR:

By_____
(Corporate Seal)

Attest _____

Address for giving notices:

License No. _____

Agent for service process:

_____
(If CONTRACTOR is a corporation attach evidence of authority to sign.)

CERTIFICATE OF APPROVAL

I hereby certify that pursuant to procedures authorized by the Commissioner's Court of the County of Webb, the foregoing Contract was approved on the _____ day of _____, 20 12 , and that the person whose signature appears above is authorized to execute such contract on behalf of the County of Webb.

CERTIFICATE AS TO CORPORATE PRINCIPAL

I, _____, certify that I am the _____ Secretary of the Corporation named as Principal in the within contract; that _____ who signed the said Agreement on behalf of the Principal was then _____ of said Corporation; that I know his signature and his signature thereto is genuine; and that said Agreement was duly signed, sealed and attested for and in behalf of said Corporation by authority of its governing body.

CORPORATE

_____ SEAL

PREVAILING WAGE RATES

As per County of Webb, Contractor shall comply with the requirements of the County's adopted rates for this project as per the Schedule of Prevailing Wage Rates attached which incorporate the following:

General Decision Number: TX120090 01/06/12 TX90
Superseded General Decision Number: TX20100116
State: Texas
Construction Type: Building
County: Webb County in Texas

END OF SECTION 0600

>

General Decision Number: TX120090 01/06/2012 TX90

Superseded General Decision Number: TX20100116

State: Texas

Construction Type: Building

County: Webb County in Texas.

BUILDING CONSTRUCTION PROJECTS (does not include residential construction consisting of single family homes and apartments up to and including 4 stories)

Modification Number	Publication Date
0	01/06/2012

* SUTX1996-001 01/10/1996

	Rates	Fringes
BRICKLAYER	$ 12.50	
CARPENTER (Including Installation of Forms and Drywall Excluding the Installation of Softfloor, Overhead Doors, Metal Buildings, and Acoustical Ceilings)	$ 10.02	
CEMENT MASON/CONCRETE FINISHER	$ 9.21	
DRYWALL FINISHER/TAPER	$ 8.40	
ELECTRICIAN (Excluding the Wiring of HVAC and Fire Alarms)	$ 12.44	.73
GLAZIER	$ 12.00	1.06
HVAC MECHANIC (Sitting the Unit and Installing Piping Only)	$ 10.06	
IRONWORKER, STRUCTURAL	$ 7.25	.25
Laborers:		
BRICK MASON TENDER	$ 7.25	
UNSKILLED	$ 7.25	
PAINTER (Excluding Drywall Finishing)	$ 9.12	
PLUMBER (Excluding HVAC Piping)	$ 10.00	

000051

200 Constitution Avenue, N.W.
Washington, DC 20210

4.) All decisions by the Administrative Review Board are final.

==========

END OF GENERAL DECISION

GENERAL CONDITIONS

American Institute of Architects Document A201, "General Conditions of the Contract for Construction", 1987 (14th) edition, is hereby made a part of these Contract Documents by reference. A complete copy of this document may be examined in the office of the Architects, Architects Plus, Inc., 101 Merlin Rd., Laredo, Texas 78045, or may be obtained from the American Institute of Architects, 1735 New York Avenue, N.W. Washington, D.C. 20006.

Persons having or contemplating any connection with the Work of the Contract are advised to become thoroughly familiar with AIA Document A201 and the following "Supplementary Conditions" prior to proceeding.

DOCUMENT 00810 - SUPPLEMENTARY GENERAL CONDITIONS

GENERAL

The following supplements modify, change, delete from or add to the "General Conditions of the Contract for Construction", AIA Document A201, 1987 (14th) Edition. Where a portion of the General Conditions is modified or deleted by these Supplementary Conditions, the unaltered portions of the General Conditions shall remain in effect.

ARTICLE I - GENERAL PROVISIONS

1.1 Basic Definitions:

1.1.1 The Contract Documents:

Add new clause 1.1.1.1 to Subparagraph 1.1.1.:

1.1.1.1 Documents not prepared by the Architect or the Architect's consultants, such as detailed plans and specifications for trench safety systems, are part of the Contract Documents where required to satisfy OSHA, federal and state law or regulations. Such additional documents, when prepared, are separately issued by a separate consultant to be included within the Contract Documents and are not to be construed as being within the responsibility of the Architect or the Architect's consultants.

Add to Paragraph 1.1 the following Subparagraph 1.1.8:

1.1.8 Products:

The term "product": as used in these Supplementary Conditions include materials, systems and equipment.

1.2 Execution, Correlation and Intent:

1.2.1 Add the following: No contract is binding upon the Owner until it has been executed by the Owner and delivered to the Contractor.

1.2.3 Add the following: The inter-relation of the specification, the drawings and the schedules is as follows: The specifications determine the nature and setting of the several materials; the drawings establish the quantities, dimensions and details, and the schedules give the locations.

"In the event of conflicts or discrepancies among the Contract Documents, interpretations will be based on the following priorities.

1. The Agreement
2. Addenda, with those of later date having precedence over those of earlier date.
3. The Supplementary General Conditions.
4. The General Conditions of the Contract for Construction.
5. Drawings and Specifications.

In the case of an inconsistency between Drawings and Specifications or within either Document not clarified by addendum, the better quality or greater quantity of Work will be provided in accordance with the Architect's interpretation."

ARTICLE 2 - OWNER

2.2 Information and Services Required of the Owner:

2.2.1 Delete the first sentence of Subparagraph 2.2.1 and substitute the following: The Owner shall, at the request of the Contractor, prior to execution of the Agreement and thereafter only in the event payments are significantly or persistently over due, furnish the Contractor reasonable evidence that financial arrangements have been made to fulfill the Owner's obligations under the contract.

Delete Subparagraph 2.2.5 and substitute the following:

2.2.5 The Contractor will be furnished free of charge 10 copies of the Drawings and Project Manuals. Additional sets will be furnished at the cost of reproduction, postage and mailing.

ARTICLE 3 - CONTRACTOR

3.3 Supervision and Construction Procedures:

Add new clauses 3.3.1.1 and 3.3.1.2 to Subparagraph 3.3.1:

3.3.1.1 The contractor shall review prior to bidding any specified instructions concerning construction means, methods, techniques, sequences, and procedures (including those instructions recommended by the manufacturer) contained in the Contract Documents to determine if the specified procedure deviates from good construction practice; to determine if following the procedure will affect any warranties, including the Contractor's general warranty obligations of Paragraph 3.5;and to determine if the Contractor has any objections to any specified procedure.

3.3.1.2 If the Contractor objects to any specified instructions on construction means, methods, techniques, sequences and procedures, the Contractor shall propose as a substitution any alternative procedure which the Contractor will warrant, describing the proposed change on the List of Substitutions attached to the Proposal Form and entering the proposed change (if any)) in the Contract Sum as an Alternate Bid item on the Proposal Form. In the absence of any such proposed substitution, it will be understood that the Contractor has reviewed the Contract Documents and accepts sole responsibility for construction means, methods, techniques, sequences and procedures and will fully warrant the Work as required by Paragraph 3.5.

3.4 Labor and Materials:

Add new subparagraphs 3.4.3, 3.4.4 and 3.4.5 to Paragraph 3.4:

3.4.3 After the contract has been executed, the Owner and the Architect will consider a formal request for the substitution of products in place of those specified only under the conditions set forth in the General Requirements (Division 1 of the Specifications). All substitutions proposed before execution of the Contract shall be described on the List of Substitutions attached to the Proposal Form and the proposed change in Contract sum entered as an Alternate Bid item on the Proposal Form for consideration by the Owner and Architect.

3.4.3.1 The Contractor's proposed Base Bid shall be based on the products, materials and procedures as specified. Substitutions proposed during bidding must be entered as an Alternate Bid item.

3.4.4 By making requests for substitutions based on Subparagraph 3.4.3 above, the Contractor:

1. Represents that the Contractor has personally investigated the proposed substitute product and determined that it is equal or superior in all respects to that specified;

2. Represents that the Contractor will provide the same warranty for the substitution that the Contractor would for that specified.

3. Certifies that the cost data presented is complete and includes all related costs under this Contract except the Architect's redesign costs, and waives all claims for additional costs related to the substitution which subsequently become apparent; and

4. Will coordinate the installation of the accepted substitute, making such changes as may be required for the work to be completed in all respects.

3.4.5 Substitutions will not be considered if:

1. They are indicated or implied on shop drawing submissions without the formal request required in Subparagraph 3.4.3 above, or,

2. For their implementation they require a substantial revision of the Contract Documents in order to accommodate their use.

3.5 Warranty:

Add new Subparagraph 3.5.2 and 3.5.3 to Paragraph 3.5:

3.5.2 Neither final Certificate of Payment nor any provision in Contract Documents shall constitute an acceptance of Work not done in accordance with the Contract Documents nor relieve Contractor of liability in respect to any express warranties or responsibility for faulty materials or workmanship. Contractor shall remedy any defects in work and pay for any damage to other work resulting therefrom, which shall appear within warranty period. Owner shall give notice to Contractor of observed defects with reasonable promptness.

3.5.3 Additional provisions pertaining to warranties and bonds are included in Division 1, General Requirements.

3.6 Taxes:

Delete Subparagraph 3.6.1 and substitute the following:

3.6.1 Limited sales, excise and use tax exemption: The materials to be incorporated into this project will be exempt from the Limited Sales, Excise and Use Tax imposed by the Act (TEX-TAX GEN. ANN art. 20.01 et. seq.). An Exemption Certificate will be issued by the Owner to the successful bidder and the Contract between the Owner and the Contractor will contain separate amounts, specifically stated, for the following:

Labor, overhead and profit.
Materials to be incorporated into the construction project.

3.6.2 The Contractor shall ascertain the amounts applicable to the above classifications which amounts will be incorporated into the contract. Reference is hereby made to the Limited Sales, Excise and Use Tax Ruling No. 9, amended April 3, 1962, in which the comptroller of Public

Accounts of the State of Texas sets forth the rights and obligations of the parties to a contract of this type. (Applicable to repairmen and contractors.)

3.7 Permit, Fees and Notices:

3.7.1 Add the following: All permits, application fees, contribution fees, installation fees and other regulatory or governmental fees, licenses and inspections shall be secured and paid for by the contractor.

3.11 Documents and Samples at the Site:

3.11.1 Add the following: Additional provisions pertaining to Documents and Samples at the Site are included in Division 1, General Requirements.

3.12 Shop Drawings, Product Data and Samples:

Add new Subparagraph 3.12.12 to Paragraph 3.12

3.12.12 Additional provisions pertaining to Shop Drawings, Product Data and Samples are included in Division 1, General Requirements.

3.15 Cleaning Up:

3.15.1 Add the following: Additional provisions for cleaning up are included in Division 1, General Requirements.

3.18 Indemnification:

Add new Clause 3.18.1.1 to Subparagraph 3.18.1:

3.18.1.1 The Contractor's obligation of indemnity extends to claims, damages, losses and expenses resulting from the contractor's failure to give notice of errors and inconsistencies which would be reasonably apparent in the Contractor's review of Contract Documents and field conditions required by Paragraph 3.5.

Add new Subparagraph 3.18.4 to Paragraph 3.18:

3.18.4 Contractor's indemnification obligation shall not be less than any limits of liability required by law or by those set forth in Paragraph 11.1.2.

ARTICLE 4 - ADMINISTRATION OF THE CONTRACT

4.2 Architect's Administration of the Contract:

4.2.2 In the first sentence of Subparagraph 4.2.2 delete the following words: "is being performed in a manner indicating that the Work".

4.3.8 Claims for Additional Time

Add the following new clauses:

4.3.8.2.1 The latest issue of "Local Climatological Data; Annual Summary with Comparative Data" for Pearsall, Texas Prepared by U.S. Department of Commerce, National Oceanic and Atmosphere conditions for time period in question.

The following monthly data is the mean number of working days of precipitation, which shall constitute normal weather conditions in Pearsall, Texas:

Month	Rain Days	Month	Raindays
Jan.	6	Jul.	4
Feb.	4	Aug.	5
Mar.	3	Sep.	7
Apr.	3	Oct.	5
May.	4	Nov.	4
June	4	Dec.	5

4.3.8.3 The Contractor shall have no claim for compensation or damages for delays or hindrances to the work occasioned by any act or omission of the Owner, or weather delay, other provisions of the Contract notwithstanding, and further agrees that he shall be fully compensated for all delays solely by an extension of time.

4.3.8.4 No extension of time shall release the Contractor or the Surety furnishing a performance or payment bond from all obligations thereunder, which obligations shall remain in full force until the discharge of the Contract.

4.5 Disputes

Add new Clause 4.5.1.1 to Subparagraph 4.5.1:

4.5.1.1 Disputes: Except as otherwise provided in this Contract, any dispute concerning a question of fact arising under this contract, which is not disposed of by agreement shall be decided by the Owner who shall reduce his decision to writing and mail or otherwise furnish a copy thereof to the Contractor. The decision of the Owner shall be final and conclusive unless, within 30 days from the date of receipt of such copy, the Contractor mails or otherwise furnishes to the owner a written appeal addressed to the **County Engineer, the County of Webb.** If the decision on the appeal is adverse, the Contractor may within 30 days make further appeal to the **Commissioner's Court** of the **County of Webb** whose decision shall be final and conclusive. In connection with any appeal under this clause, the Contractor shall be afforded an opportunity to be heard and to offer evidence in support of his appeal to a person or persons.

ARTICLE 5 - SUBCONTRACTORS

5.2 Award of Subcontractors and Other Contracts for Positions of the Work:

5.2.1 Delete the first sentence and substitute the following: Unless otherwise stated in the Contract Documents or the bidding requirements, the Contractor, within seven (7) days after the execution of the Contract, shall furnish in writing to the Owner through the Architect, the names of persons or entities (including those who are to furnish materials or equipment fabricated to a special design) proposed for each portion of the Work tabulated by the sections of the specifications that are subcontracted.

Add Clauses 5.2.1.1 and 5.2.1.2 to Subparagraph 5.2.1:

5.2.1.1 Not later than 7 days after execution of the Contract, the Contractor shall furnish in writing to the Owner through the Architect, the names of persons or entities proposed as manufacturers for each of the products proposed to be incorporated into the Work tabulated by each section of the specifications and, where applicable, the names of the installing Subcontractor.

5.2.1.2 If adequate data on any proposed manufacturer or installer is not available, the Architect may state that action will be deferred until the Contractor provides further data. Failure to object to a manufacturer shall not constitute a waiver of any of the requirements of the Contract Documents, and all products furnished by the listed manufacturer must conform to such requirements.

ARTICLE 7 - CHANGES IN THE WORK

7.1 Changes:

7.1.3 Add the following: If the Contractor performs extra work prior to written order, it is done at the Contractor's risk of forfeiting all claims for extra charge.

7.3 Construction Change Directives:

7.3.3.2 Add the following: Unit prices stated in the Contract Documents or subsequently agreed upon represent the total unit price including all cost of overhead and profit. When both additions and credits are involved in any one item of a Change Order the net increase or decrease in quantity shall be computed prior to the application of the stated unit prices.

7.3.6 In the first sentence, delete the words, "a reasonable allowance for overhead and profit" and substitute "an allowance for overhead and profit in accordance with Clauses 7.3.10.1 through 7.3.10.6 below".

Add the following Subparagraph 7.3.10 to 7.3:

7.3.10 In Subparagraph 7.3.6 the allowance for the combined overhead and profit included in the total cost to the Owner shall be based on the following schedule:

1. For the Contractor, for Work performed by the Contractor's own forces, 10% of the cost.

2. For the Contractor, for Work performed by the Contractor's Subcontractor, 5% of the amount due to the Subcontractor.

3. For each Subcontractor or Sub-subcontractor involved, for Work performed by that Subcontractor's or Sub-subcontractor's own forces, 10% of the cost.

4. For each Subcontractor, for Work performed by the Subcontractor's Sub-subcontractors, 5% of the amount due the Sub-subcontractor.

5. Cost to which overhead and profit is to be applied shall be determined in accordance with Subparagraph 7.3.6.

6. In order to facilitate checking of quotations for extras or credits, all proposals, except those so minor that their propriety can be seen by inspection, shall be accompanied by a complete itemization of costs including labor, materials an Subcontracts. Labor and Materials shall be itemized in the manner prescribed above. Where major cost items are Subcontracts, they shall be itemized also. In no case will a change involving over $200.00 be approved without such itemization.

ARTICLE 9 - PAYMENTS AND COMPLETION

9.2 Schedule of Values:

9.2.1 Add the following: Additional provisions for the Schedule of Values are included in Division-1, General Requirements.

9.3 Application for Payment:

9.3.1 Add the following: Additional provisions for the Application of Payment are included in Division-1, General Requirements.

Add new Clause 9.3.1.3 to Subparagraph 9.3.1:

9.3.1.3 Until Substantial Completion, the Owner shall pay 95% of the amount due to the Contractor on account or progress payments.

9.4 Certificates for Payment:

9.4.3 Add the following: Additional provisions for the Certificates for Payment are included in the Owner-Contractor Agreement and in Division-1, General Requirements.

9.5 Decisions to Withhold Certification:

Delete clauses 9.5.1.2, 9.5.1.3 and 9.5.1.5 and substitute the following:

9.5.1.2 third party claims filed or reasonable evidence, in the form of an order from the courts, indicating probable filing of such claims.

9.5.1.3 when so ordered by the courts due to failure of the Contractor to make payments properly to Subcontractors or for labor, materials and equipment,

9.5.1.5 damage to the Owner, or when so ordered by the courts, damage to another contractor.

Add new clause 9.5.1.8 to Subparagraph 9.5.1:

9.5.1.8 Damages resulting from the contractor's failure to give notice of errors and inconsistencies as obligated by Paragraph 3.2.

9.6 Progress Payments:

Add Subparagraph 9.6.7 to Paragraph 9.6.

9.6.7 Additional provisions for the Progress Payments are included in the Owner-Contractor Agreement and in Division-1, General Requirements.

9.8 Substantial Completion:

9.8.1 Add the following: Additional provisions for Substantial Completion are included in the Owner-Contractor Agreement and in Division-1, General Requirements.

9.8.3 Add the following sentence:

The payment shall be sufficient to increase the total payments to 95% of the Contract Sum, less such amounts, as the Architects shall determine for incomplete Work and unsettled claims.

Add the following Paragraph 9.11 to Article 9:

9.11 Liquidated Damages:

9.11.1 The Contractor and the Contractor's Surety, shall be liable for and shall pay the Owner the sum hereinafter stipulated as agreed to liquidated damages for each calendar day of delay until the Work is substantially complete: **Three Hundred and Fifty and No/100 Dollars ($350.00).**

Add the following Paragraph 9.12 to Article 9:

9.12 Liens:

9.12.1 It is directly understood that, by virtue of this Contract, no mechanic, Contractor, material man, artisan, or laborer, whether skilled or unskilled shall ever in any manner have claim or acquire any lien upon the building, or any of the improvements of whatever nature or kind so erected or to be which said building or any of the improvements are so erected, built, or situated.

ARTICLE 10 - PROTECTION OF PERSONS AND PROPERTY

10.2 Safety of Persons and Property:

Add Clause 10.2.4.1 to Subparagraph 10.2.4:

10.2.4.1 When use or storage of explosives or other hazardous materials or equipment or unusual methods are necessary, the Contractor shall give the Owner reasonable advance notice.

ARTICLE 11 - INSURANCE AND BONDS

11.1 Contractor's Liability Insurance:

Add Clauses 11.1.1.8 and 11.1.1.9 to Subparagraph 11.1.1:

11.1.1.8 Liability Insurance shall include all major divisions of coverage and be on a comprehensive basis including:

1. Premises Operations (including X-C/U coverage as applicable).
2. Independent Contractor's Protective.
3. Products and Complete Operations.
4. Personal Injury Liability with Employment Exclusion Deleted.
5. Contractual, including specified provision for Contractor's obligation under Paragraph 3.18.
6. Owner, non-owned and hired motor vehicles.
7. Broad Form Property Damage including Completed Operations.
8. Umbrella Excess Liability.

11.1.1.9 If the General Liability coverages are provided by a Commercial General Liability Policy on a claims-made basis, the policy date or Retroactive Date shall predate the Contract; the termination of the policy or applicable extended reporting period shall be no earlier than the termination date of coverages required to be maintained after final payment, certified in accordance with Subparagraph 9.10.2.

Add clause 11.1.2.1 to Subparagraph 11.1.2:

11.1.2.1 The insurance required by Subparagraph 11.1.1 shall be written for not less than the following limits, or greater if required by law:

1. Worker's Compensation:

    a. State: Statutory
    b. Applicable Federal (e.g., Longshoremen's): Statutory
    c. Employer's Liability: $200,000 Disease, Policy Limit; $100,000 Disease, Each Employee.

2. Comprehensive or Commercial General Liability (including Premises - Operations; Independent Contractor's Protective; Products and Completed Operations; Broad Form Property Damage):

    a. Bodily Injury: $500,000 Each Occurrence; $1,000,000 Aggregate.
    b. Property Damage: $100,000 Each Occurrence: $1,000,000 Aggregate
    c. Products and Completed Operations to be maintained for one year after final payment: $500,000 Aggregate.
    d. Property Damage Liability Insurance shall provide X,C and U coverage as applicable.
    e. Broad Form Property Damage Coverage shall include Completed Operations.

3. Contractual Liability:

   a. Bodily Injury: $500,000 Each Occurrence; $1,000,000 Aggregate.
   b. Property Damage: $100,000 Each Occurrence; $1,000,000 Aggregate.

4. Personal Injury, with Employment Exclusion deleted; $1,000,000 Aggregate.

5. Business Auto Liability (including owned, non-owned, and hired vehicles):

   a. Bodily Injury: $250,000 Each Person; $1,000,000 each occurrence.
   b. Property Damage: $1,000,000 Each Occurrence.

6. If the General Liability coverages are provided by a Commercial Liability policy, the:

   a. General Aggregate shall be not less than $1,000,000 and it shall apply, in total, to this project only.
   b. Fire Damage Limit shall be not less than $100,000 on any one fire.
   c. Medical Expense Limit shall be not less than $500,000 on any one person.

7. Umbrella Excess Liability:

   $2,000,000 Over primary insurance
   $2,000,000 Retention for self-insured hazards each Occurrence

Delete the second sentence of Subparagraph 11.1.3 and substitute the following:

These certificates and the insurance policies required by this Paragraph 11.1 shall contain a provision that coverage afforded under the policies will not be canceled or allowed to expire until at least 30 days after prior written notice has been received by the owner, as evidenced by return receipt or registered or certified mail.

Add the following sentence to Subparagraph 11.1.3:

If this insurance is written on the Comprehensive General Liability policy form, the Certificates shall be AIA Document G705, Certificate of Insurance. If this insurance is written on a Commercial Liability policy form, ACORD form 25s will be acceptable.

11.2 Owner's Liability Insurance:

11.2.1 Delete the last two sentences of Subparagraph 11.2.1 and substitute the following: The Contractor shall purchase and maintain insurance covering the Owner's contingent liability for claims which may arise from operations under the contract, Architects Plus, Inc. shall be named "additional named insured".

Add subparagraph 11.2.2 to Paragraph 11.2:

11.2.2 The Contractor shall furnish the Owner an Owner's Protective Policy with limits of $300,000 aggregate with the Owner named as the named insured. With the premium to be paid by the Contractor and the policy delivered to the Owner before start of construction.

11.3 Property Insurance:

11.3.1 Modify the first sentence of Subparagraph 11.3.1 as follows: Delete "Unless otherwise provided, the Owner" and substitute "the Contractor."

Add the following sentences:

The form of policy for this coverage shall be Completed Value.

If the Owner is damaged by the failure of the Contractor to maintain such insurance, then the Contractor shall bear all reasonable costs properly attributable thereto.

11.3.1.2 Delete Clause 11.3.1.2

Delete Clause 11.3.1.3 and substitute the following:

11.3.1.3 If by the terms of this insurance any mandatory deductibles are required, or if the Contractor should elect, with the concurrence of the Owner, to increase the mandatory deductible amounts or purchase this insurance with voluntary deductible amounts, the Contractor shall be responsible for the payment of the amount of the deductible in the event of a paid claim.

11.3.2 Modify first sentence of Subparagraph 11.3.2 as follows: Delete "The Owner shall purchase and maintain" and substitute "The Contractor shall purchase and maintain".

11.3.4 Delete Subparagraph 11.3.4.

Delete Subparagraph 11.3.6 and substitute the following:

11.3.6 Before an exposure to loss may occur, the Contractor shall file with the Owner two certified copies of the policy or policies providing this Property Insurance coverage each containing those endorsements specifically related to the Project. Each policy shall contain a provision that the policy will not be canceled or allowed to expire until at least 30 days after prior written notice has been received by the Owner as evidence by return receipt or registered or certified mail.

11.3.7 Modify Subparagraph 11.3.7 by substituting "Contractor" for "Owner" at the end of the first sentence.

11.3.8 Modify Subparagraph 11.3.8 by substituting "Contractor" for "Owner" as fiduciary; except that at the first reference to "Owner" in the first sentence, the word "this" should be substituted for "Owner's."

11.3.9 Modify Subparagraph 11.3.9 by substituting "Contractor" for "Owner" each time the latter word appears.

11.3.10 Modify Subparagraph 11.3.10 by substituting "Contractor" for Owner " each time the latter word appears.

11.4 Performance Bond and Payment Bond:

Delete Subparagraph 11.4.1 and substitute the following:

11.4.1 The Owner shall have the right to require the Contractor and his Subcontractors to furnish bonds covering the faithful performance of the Contract and the payment of all obligations arising thereunder as required in the Bidding Documents and in the Contract Documents and as required by Article 5160, Texas Revised Civil Statutes.

11.4.1.1 Not later than the date of execution of the Contract, the contractor shall furnish and file with the Owner in the amounts herein required, the following surety bonds, or if the Work is commenced prior execution of the Contract in a response to a letter of intent, the Contractor shall, prior to the commencement of the Work, submit evidence satisfactory to the Owner that such bonds will be furnished.

11.4.1.1.1 A performance bond on the Owner's approved form, in the amount of 100 percent (100%) of the Contract Sum or Subcontract Sum (as applicable), conditioned upon the full and faithful performance of the Work in accordance with the Contract Documents. Said bond shall cover the Contractor's general project one-year warranty as required by the Contract Documents. Additional requirements are included in Bond Instructions.

11.4.2.1.1.2 A payment Bond on the Owner's approved form in the amount of 100 percent (100%) of the Contract Sum solely for the protection of all claimants supplying labor and materials in the prosecution of the Work provided for in the Contract. Additional requirements are included in Bond Instructions.

11.4.1.2 The cost of the bonds shall be paid by the Contractor who is furnishing the bonds. All bonds shall be written by a surety licensed to do business in Texas and acceptable to the Owner. Additional requirements are included in Bond Instructions.

11.4.1.3 If the bonds are executed by an attorney-in-fact on behalf of the surety, affix to the bond a certified and current copy of his power of Attorney.

ARTICLE 13 - MISCELLANEOUS PROVISIONS

13.5 Tests and Inspections

Delete Subparagraph 13.5.1 and substitute the following:

13.5.1 Inspections and approvals of portions of the Work required by the Contract Documents or by law, ordinances, rules, regulations or orders of public authorities having jurisdiction shall be made at an appropriate time. Unless otherwise provided, the Contractor shall make arrangements for such inspections and approvals with the appropriate public authority, and shall bear all related costs of such inspections and approvals. The Contractor shall give the Architect timely notice of when and where inspections are to be made so the Architect may observe such procedures. The Owner shall bear costs of inspections and approvals, which do not become requirements until after bids are received or negotiations concluded. Additional provisions for tests are included in Division-1, General Requirements.

Add the following Paragraph 13.8 to Article 13.

13.8 Equal Opportunity

13.8.1 "The Contractor shall maintain policies of employment as follows":

13.8.1.1 The Contractor and the Contractor's Subcontractor's shall not discriminate against any employee or applicant for employment because of race, religion, color, sex, or national origin. The Contractor shall take affirmative action to insure that applicants are employed, and that employees are treated during employment without regard to their race, religion, color, sex, or national origin. Such action shall include, but not be limited to, the following: employment, upgrading, demotion or transfer; recruitment or recruitment advertising; layoff or termination; rates of pay or other forms of compensation; and selection for training, including apprenticeship. The Contractor agrees to post in conspicuous places, available to employees and applicants for employment, notices setting forth the policies of non-discrimination.

13.8.1.2 The Contractor and the Contractor's Subcontractor's shall, in all solicitations or advertisements for employees placed by them or on their behalf, state that all qualified applicants will receive consideration for employment without regard to race, religion, color, sex, or national origin.

ARTICLE 14 - TERMINATION OR SUSPENSION OF THE CONTRACT

Add the following Paragraph 14.4 to Article 14:

14.4 Termination by the Owner for Convenience:

14.4.1 The Owner may, at any time, terminate the Contract for the Owner's convenience and without cause.

14.4.2 Upon receipt of written notice from the Owner of such termination for the Owner's convenience, the Contractor shall:

.1 Cease operations as directed by the Owner in the notice;
.2 Take actions necessary, or that the Owner may direct, for the protection and preservation of the Work; and
.3 Except for the Work directed to be performed prior to the effective date of termination stated in the notice, terminate all existing Subcontracts and purchase orders and enter into no further Subcontracts and purchase orders.

14.4.3 In case of such termination for the Owner's convenience, the Contractor shall be entitled to receive payment from the Owner on the same basis provided in Subparagraph 14.1.2.

END OF SECTION 00810

SPECIAL CONDITIONS

SC:01 LOCAL LABOR

A. The contractor is encouraged to use local labor, but not at the expense of poor workmanship and high cost, however, all things being equal, local workmen shall be given preference. Contractor shall maintain a record of contacts made with local labor and show outcome of each effort.

SC: 02 PRESIDENTIAL EXECUTIVE ORDER #10925

A. Contractors, in performing work under this Contract, shall not discriminate against any applicant for employment, or any employees, because or race, creed, or national origin, in compliance with the Presidential Executive Order #10925, as amended.

SC: 03 SAFETY

A. Authority: Williams - Steiger Occupational Safety and Health Act of 1970, (84 Stat. 1593, 1600; 29 U.S.C. 655,657), Chapter XVII of Title 29, amended to add Part 1910.

1. Title 29 - Labor: All of Part 1910 - Occupational Safety and Health Standards and All of Part 1926 - Safety and Health and Regulations for Construction, and Part 1926 of Title 29 - Code to Federal Regulations.

SC: 04 MINIMUM WAGE RATES

A. Not less than the prevailing rate of wages for work of similar character as listed in the attached Schedule of Prevailing Wage Rates shall be paid to all laborers, workmen and mechanics employed in connection with this contract.

B. The current wage rates shall be as per the attached Schedule of Prevailing Wage Rates established pursuant to authority of Wage and Hour Division, U.S. Department of Labor for each category or trade required for this project. Nothing herein contained, however, shall be construed to prohibit the payment to any laborer, workman, or mechanic employed on the work of more than the prevailing rate of wages.

END OF SECTION

Webb County-Remodeling & Additions to Justice of the Peace, Precinct 4 – Court Building

GENERAL CONSTRUCTION

SUBSURFACE GEOTECHNICAL DATA

SOIL AND SITE CONDITIONS

Soils consultants have not made test boring and field investigations for the Owner's design use within the approximate area of construction for this project. No copies of soil boring test results are available for inclusion in this Project Manual for Bidder's information. Each Bidder must visit the site and acquaint himself with all existing conditions. Prior to submission of bids, Bidders may make their own investigations to satisfy themselves as to soil, site and subsurface conditions. **No soils test boring data is included in the Specifications for the Bidder's information and no soils test boring data is made a part of the Contract Documents.**

No representation or warranties of accuracy or continuity of existing subsurface conditions is made or intended. It is expressly understood that the Architect and Owner will not be responsible for interpretations or conclusions drawn solely by the Bidder/Contractor.

TECHNICAL SPECIFICATIONS - TRENCH SAFETY SYSTEMS

A. Description: This item shall govern the Trench Safety Systems required for the construction of all trench excavation to be utilized in the project, including all additional excavation and backfill necessitated by the safety system. The Trench Safety Systems shall be suitable for construction of pipelines, utilities, etc., that are installed below grade and shall be sufficient to fully protect public or private property, including other existing utilities and structures below, or above grade. Trench Safety Systems include, but are not limited to, sloping of sides of excavation, sheeting, trench boxes or trench shields, sheet piling, cribbing, bracing, shoring, de-watering or diversion of water to provide adequate drainage.

The Contractor shall be responsible for the design of Trench Safety Systems and procedures such as the use of sheet piling, shoring or other means of temporary support to protect existing buildings, streets, highways, water conveying structures or any other structures. In the case of existing utilities, the Contractor may elect to remove the utilities under stipulated condition that the removal and subsequent replacement of these utilities shall meet with the approval of the Engineer, the Owner, the Utility Owner, and all agencies having jurisdiction of the structure or property. In all cases, the Contractor shall be fully responsible for the protection of public, or private property, and for the protection of any person or persons who, as a result of the Contractor's work, may be injured.

B. Construction Methods: Trench Safety Systems shall be accomplished in accordance with the detailed specifications set out in the provisions of Excavations, Trenching, and Shoring, Federal Occupational Safety and Health Administration (OSHA) Standards, 29 CFR, Part 1926, Subpart P, as amended including proposed Rules published in the Federal Register (Vol. 52, No. 72) on Wednesday, April 15, 1987. The sections that are incorporated into these specifications by reference include Sections 1926 - 650 through 1926 - 653. Legislation that has been enacted by the Texas Legislature (H.B. No. 662 and H.B. No. 665) with regard to Trench Safety Systems is hereby incorporated, by reference, into these specifications.

C. Safety Program: The Contractor shall submit a safety program specifically for the construction of trench excavations together with the trench excavation plans for each below grade excavation as may be required to satisfy OSHA, federal and state law or regulations. Such additional documents, when prepared, shall be separately issued by Contractor's consultant and shall not be construed as being within the responsibility of Architect or the Architect's consultants.

D. Estimate: Contractor shall submit Trench Safety Systems estimated quantities at the time of the execution of the Contract and shall verify all quantities through actual measurement in the field.

Measurement: Trench Safety Systems shall be measured by the linear foot along the centerline of trench including manholes and other line structures.

Payment: Payment for Trench Safety Systems shall be made at the lump sum amount in Bid Proposal for Trench Safety Systems. Payment of all work prescribed under this item shall be full compensation for the Trench Safety Systems including any additional design, testing, inspection, excavation, and back-fill required for furnishing, placing, maintaining and removing all shoring, sheeting, or bracing; for de-watering or diversion of water; for all jacking and jack removal; for required compaction; and all other labor, materials, tools, equipment, and incidentals necessary to complete the Trench Safety Systems work.

E. Inspection: The Contractor shall provide a qualified person to make daily inspections of the Trench Safety Systems to ensure that the systems meet OSHA requirements. The Contractor shall maintain a permanent record of daily inspections, and submit a weekly report to a public authority having jurisdiction.

If evidence of possible cave-ins, or slides, is apparent, all work in the trench shall cease until the necessary precautions have been taken by the Contractor to safeguard personnel entering the trench. It is the sole duty, responsibility, and prerogative of the Contractor, not the Owner or the Owner's designated representative, to determine the specific applicability of the designated Trench Safety Systems to each field condition encountered on the project.

F. Emergencies: In any emergency situation which may threaten or affect the safety or welfare or persons or property, the Contractor shall act at his discretion to prevent possible damage, injury, or loss. Any additional compensation or extension of the time claimed for the emergency and in accordance with Paragraph 13 of the General Contract Conditions, Protection of Work and Property -- Emergency.

DIVISION 1 - GENERAL REQUIREMENTS

SECTION 01010 - SUMMARY OF THE WORK

Descriptive Summary of the Work:

Identification: THE REMODELING & ADDITIONS TO THE EXISTING
JUSTICE OF THE PEACE, PRECINCT 4 – COURT BUILDING

Contract Documents: Requirements of the work are contained in the contract documents, and include cross-references herein to published information, which is not necessarily bound therewith.

Verbal Summary: Without force and effect on requirements of contract documents, the (incomplete) description of the work of the Contract can be summarized as follows:

The work includes the remodeling and construction of additions to the Justice of the Peace, Precinct 4 – Court Building, complete with all necessary incidentals for complete project including sitework. The project site is located in LAREDO, TX, and shall be subject to the requirements of construction documents and the request for competitive sealed proposals. Owner reserves the right to award the work in multiple contracts or subcontracts.

Contractor Use of Premises:

General: During the entire construction period the Contractor shall have limited use of the premises for the remodeling & additions operations, including limited use of the site. Owner shall maintain occupancy and use of the premises, Contractor shall coordinate with Owner to avoid disrupting Owner's on-going operations.

Codes:

All work performed under this contract shall comply with and shall be governed by the 2000 International Building Code by the International Code Council, Inc.

END OF SECTION 01010

SECTION 01020 – ALLOWANCES

PART I – GENERAL

RELATED DOCUMENTS

Drawings and general provisions of the Contract, including General and Supplementary Conditions and other Division 1 Specification Sections, apply to this Section.

SUMMARY

This Section includes administrative and procedural requirements governing allowances.

Selected materials and equipment are specified in the Contract Documents by allowances. In some cases, these allowances include installation. Allowances have been established in lieu of additional requirements and to defer selection of actual materials and equipment to a later date when additional information is available for evaluation. If necessary, additional requirements will be issued by Change Order.

Types of allowances include the following:

Contingency allowances
ADA allowances
Signage allowances.

SELECTION AND PURCHASE

At the earliest practical date after award of the Contract, advise the Architect of the date when the final selection and purchase of each product or system described by an allowance must be completed to avoid delaying the work.

At the Architect's request, obtain proposals for each allowance for use in making final selection. Include recommendations that are relevant to performing the work.

Purchase products and systems selected by the Architect from the designated supplier.

SUBMITTALS

Submit proposals for purchase of products or systems included in allowances, in the form specified for Change Orders.

Submit invoices or delivery slips to show the actual quantities of materials delivered to the site for use in fulfillment of each allowance.

CONTINGENCY ALLOWANCES

Use the contingency allowance only as directed for the Owner's purposes and only by Change Orders that indicate amounts to be charged to the allowance.

Change Orders authorizing use of funds from the contingency allowance will include Contractor's related costs. Overhead and profit for contingency allowances is included in contract sum and therefore contractor overhead and profit will not be added to change order amounts charged to contingency allowances.

At Project closeout, credit unused amounts remaining in the contingency allowance to the Owner by Change Order.

STIPULATED SUM ALLOWANCES

Use the stipulated sum allowance for the purchase of materials only, labor, installation, overhead and profit to be included in the contract sum. Any difference in cost and allowance will be returned to the Owner.

PART 2 – PRODUCTS (Not Applicable)

PART 3 – EXECUTION

EXAMINATION

Examine products covered by an allowance promptly upon delivery for damage or defects.

PREPARATION

Coordinate materials and their installation for each allowance and related materials and installations to ensure that each allowance item is completely integrated and interfaced with related work.

SCHEDULE OF ALLOWANCES

Allowance No. 1: Include a Contingency/Betterment Allowance of Ten Thousand ($10,000) Dollars to be used at the Owner's discretion.

Allowance No. 2: Include an ADA Contingency/Betterment Allowance of Five Thousand ($5,000) Dollars to be used at the Owner's discretion.

END OF SECTION 01020

SECTION 01030 – ALTERNATES

PART I – GENERAL

RELATED DOCUMENTS

Drawings and general provisions of the Contract, including General and Supplementary Conditions and other Division 1 Specification Sections, apply to this Section.

SUMMARY

Alternate proposal prices quoted on proposal forms will be reviewed and accepted or rejected at the Owner's option.

Contractor shall coordinate and complete all work related to alternate bids accepted by Owner and shall modify surrounding work as required for complete integration of alternate bids.

SCHEDULE OF ALTERNATE BIDS:

ADDITIVE ALTERNATES:

Additive Alternate NO. 1: **"METAL ROOF" Alternate:** Remove existing Built-up Roof and insulation to decking, provide new metal roof on metal transverse framing and 9" fiberglas batt insulation, provide finished parapet walls, gutters and downspouts, in lieu of sloped "Duro-Last" roofing system.

(Add) _____ Dollars ($ _____).

Additive Alternate No. 2: **"METAL SIDING" Alternate:** Delete metal inset wall panels at new addition. Provide continuous brick veneer masonry.

(Deduct) _____ Dollars ($ _____).

Additive Alternate No. 3: **"Widen Hallway" Alternate:** Relocate wall at South end of court room, change existing three foot (3') wide hallway to four foot (4') wide hallway. Repair wall, floor and ceiling finishes to match existing to remain. Relocate and re-wire electrical/data outlets and security camera. Modify wood railing, repair stairs and wood trim at raised floor.

(Add) _____ Dollars ($ _____).

END OF SECTION 01030

SECTION 01040 - PROJECT COORDINATION

Administration and Supervision:

Coordination: Coordinate various elements of the work and entities engaged to perform work; and coordinate the work with existing facilities/conditions, and with work by separate contractors (if any) and by Owner.

Survey/Recording:

General: Working from established lines and levels at or near project site, establish and maintain dependable markers for lines and levels of the work, including markers for each story of construction. Calculate dimensions and measure for layout of work; do not scale the drawings. Maintain surveyor's log of layout work. Record deviations (if any) from drawing information on existing conditions, and review with Architect at time of discovery.

Installer Inspections: Require Installer of each major unit of work to inspect substrate and conditions for installation, and to report (in writing) unsatisfactory conditions. Correct unsatisfactory conditions before proceeding. Inspect each product immediately before installation. Do not install damaged or defective products, materials or equipment.

Preparation for Installation:

Pre-Installation Conference: Prior to starting installation of each major component of the work, hold a pre-installation conference, attended by each entity involved or affected by planned installation. Include technical representatives of product manufacturers and others recognized as expert or otherwise capable of influencing success of the installation.

Review significant aspects of requirements for the work. Record discussion and distribute as plan of action. Pre-installation conferences are specifically required for (but not limited to) the following installations:

Installation. General:

Comply with manufacturer's instructions and recommendations to extent printed information is more detailed or stringent than requirements contained directly in contract documents.

Timing: Install work during time and under conditions which will ensure best possible result, coordinated with required inspection and testing.

Anchor work securely in place, properly located by measured line and level, organized for best possible uniformity, visual effect, operational efficiency, durability, and similar benefit to Owner's use. Isolate non-compatible materials from contact, sufficiently to prevent deterioration.

Mount individual units of work at industry-recognized mounting heights, if not otherwise indicated; refer uncertainties to Architect before proceeding.

Cleaning and Protection:

General: Clean each element of work at time of installation. Provide sufficient maintenance and protection during construction to ensure freedom from damage and deterioration at time of substantial completion.

END OF SECTION 01040

SECTION 01043 - M/E GENERAL PROVISIONS

General:

Except as otherwise indicated, where items of work commonly recognized as general are specified as either mechanical or electrical work, comply with applicable provisions of sections in Divisions 2 through 14 for performance of that work. Except as otherwise indicated, where items of work commonly recognized as either mechanical" or electrical are specified as general work (not mechanical work and not electrical work), comply with applicable provisions of sections in Divisions 15 and 16, respectively, for performance of that work.

Motors: Built-in thermal overload protection, NEMA No. 48 frames, Quiet rating, general-purpose, continuous-duty, Design B, Class A, capable of 5 starts per hour; squirrel-cage induction polyphase for 1/2 hp and larger, capacitor-start single-phase up to 1/3 hp, Contractor's option for 1/6 hp and smaller; power factor 1.15 for 1.0 hp or larger, 1.25 for fractional hp; regreasable (where accessible) ball or roller bearings, except sleeve-type bearings permitted on light-duty fractional hp motors; NEMA recommended enclosure type.

Starters and Switches: Provide magnetic starters for motors 1/2 hp and larger, and for smaller motors on automatic control. Provide push-button switches with pilot lights, and with overload protection where not protected by panelboard circuit breaker. Equip starters with reset button, trip-free relay on each phase, under-voltage release, and devices for control system coordination (including transformers where voltage exceeds 240 V) .

Heating Elements: 120 V for less than 2KW, higher voltage single-phase for up to 5KW, higher voltage 3-phase for over 5KW.

Drip Pans: Protect electrical/ electronic work from every possibility of overhead drippage (from piping and similar sources), with suitable zinc-coated steel or copper drip pans, properly drained and permanently supported.

Mechanical Provisions of Non-Mechanical Work:

General: Except as otherwise indicated, mechanical connections of mechanical work to non-mechanical work are defined as mechanical work. Make domestic water connections with loose-key stops, and make drainage connections with P-traps.

Mechanical/Electrical System Identification:

Pipe Conduit Markers: Provide standard industry color-coded

(ANSI A13.1) banding for exposed piping and conduit.Except for drainage and vent piping, include printed identification of service, and arrows showing direction of flow. Locate markers at ends of lines, near major branches and equipment connections, near penetrations where lines become concealed, and at 50' maximum intervals of exposure. Small size branches need not be marked, if less than 40' in length.

Valve Identification: Tag primary valves with numbered and service-coded tags of brass or plastic. Prepare tagged-valve schedule listing size, service and location; mount behind framed glass and install where directed, and submit duplicate copy.

Cable/Conductor Identification: Mark primary electrical, electronic cables and conductors with standard industry tags at points of interruption and connection; show circuit numbers and service.

Underground Service Identification: Bury a bright-colored plastic ribbon, with suitable printing, directly over each service, 6 - 8 below finished grade. Mark piping, conduits and cables.

Ductwork Identification: Stencil signs on housing and access doors to indicate service, direction of flow, equipment accessed, and similar information.

Operational and Warning Signs: Where needed for proper identification, operation, maintenance or safety, provide appropriate signs of engraved plastic-laminate or enameled steel. Where appropriate for normal operating and maintenance information, tags of plasticized card stock may be provided in lieu of signs.

Access to M/E Equipment:

General: Provide access to concealed mechanical and electrical equipment, adequate for operation and maintenance. Provide access doors complying with Division-8 Access Doors" section, except where removable-plate type or other suitable type of access unit will provide adequate access. Provide locked units where indicated. Where located in a painted surface area, provide units primed for painting; otherwise, provide polished chrome or stainless steel units, unless other type of finish is indicated.

Excavating and Backfilling for M/E Work:

General: Comply with applicable provision of Division-2 sections.

Concrete for M/E Work:

General: Comply with applicable requirements of Division-3 sections, including reuse of established design mixes; and coordinate work including finishes with work of Division 3. Provide strength classes, with content limitations as indicated, for applications as follows and for similar applications:

Class 4000: 565 lbs. cement/yd., 0.57 water/cement ratio; for tanks, vaults, beam-type foundations.

Class 3000: 500 lbs. cement/yd., 0.68 water/cement ratio; for underground structural concrete, reinforced encasements, block-type foundations with least dimension 0.2 x largest, curbs, pads, inertia blocks.

Class 2500: 450 lbs. cement/yd., 0.75 water/cement ratio; for plain encasement, fill of steel-framed units.

Rough Grouting Class: 565 lbs. cement/yd., 0.75 water/cement ratio, limited aggregate size, for rough grouting (not for setting equipment bases).

Backfill Class: 375 lbs. cement/yd., 0.87 water/cement ratio; for backfilling excavations below level of support.

Painting for M/E Work:

General: Comply with applicable provisions of Division-9 "Painting" and "Coatings" sections, and coordinate with painting of non-M/E work for type of paint and colors. The work of this subarticle is defined as, but not necessarily limited to the following; paint surfaces which would normally be painted in the applications and exposures indicated:

Paint following categories of M/E work where accessible for painting, excluding work on the exterior work exposed to occupants of building; except do not paint over fully factoryfinished surfaces, unless color is unacceptable as judged by Architect:

Ferrous metal; excluding cast iron which is concealed by ceilings or other enclosures.

Zinc-coated metal; excluding work which is concealed, unless located in "high humidity area.

Aluminum surfaces; excluding work which is concealed, and excluding anodized finishes.

Concrete work which is placed similarly to non-M/E concrete concrete work which is required to be painted.

Insulation on M/E work; excluding concealed work and aluminum-foil-faced insulation.

Paint portions of ductwork interiors (black) which are visible through grilles and louvers in occupied spaces or from the exterior.

Do not paint over nameplates, finished trim, non-ferrous hardware, sliding/rotating shaft surfaces, and similar surfaces intended for exposure without painting.

END OF SECTION 01043

SECTION 01045 - CUTTING AND PATCHING

GENERAL

SUMMARY

This Section includes procedural requirements for cutting and patching.

See Division 7 Section "Through-Penetration Firestop Systems" for patching fire-rated construction.

See Divisions 2 through 16 Sections for specific requirements and limitations applicable to cutting and patching individual parts of the Work.

Requirements in this Section apply to mechanical and electrical installations. See Divisions 15 and 16 Sections for other requirements and limitations applicable to cutting and patching mechanical and electrical installations.

SUBMITTALS

Cutting and Patching Proposal: Submit a proposal describing procedures at least 10 days before the time cutting and patching will be performed, requesting approval to proceed. Include the following information:

Changes to Existing Construction: Describe anticipated results. Include changes to structural elements and operating components as well as changes in building's appearance and other significant visual elements.

Dates: Indicate when cutting and patching will be performed.

Utilities: List utilities that cutting and patching procedures will disturb or affect. List utilities that will be relocated and those that will be temporarily out of service. Indicate how long service will be disrupted.

Structural Elements: Where cutting and patching involve adding reinforcement to structural elements, submit details and engineering calculations showing integration of reinforcement with original structure.

District Project Construction Manager's Approval: Obtain approval of cutting and patching proposal before cutting and patching. Approval does not waive right to later require removal and replacement of unsatisfactory work.

QUALITY ASSURANCE

Structural Elements: Do not cut and patch structural elements in a manner that could change their load-carrying capacity or load-deflection ratio.

Operational Elements: Do not cut and patch operating elements and related components in a manner that results in reducing their capacity to perform as intended or that results in increased maintenance or decreased operational life or safety.

Miscellaneous Elements: Do not cut and patch the following elements or related components in a manner that could change their load-carrying capacity, that results in reducing their capacity to perform as intended, or that results in increased maintenance or decreased operational life or safety.

Visual Requirements: Do not cut and patch construction in a manner that results in visual evidence of cutting and patching. Do not cut and patch construction exposed on the exterior or in occupied spaces in a manner that would, in District Project Construction Manager's opinion, reduce the building's aesthetic qualities. Remove and replace construction that has been cut and patched in a visually unsatisfactory manner.

WARRANTY (Not Used)

PRODUCTS

MATERIALS

General: Comply with requirements specified in other Sections of these Specifications.

Existing Materials: Use materials identical to existing materials. For exposed surfaces, use materials that visually match existing adjacent surfaces to the fullest extent possible.

If identical materials are unavailable or cannot be used, use materials that, when installed, will match the visual and functional performance of existing materials.

EXECUTION

EXAMINATION

Examine surfaces to be cut and patched and conditions under which cutting and patching are to be performed.

Compatibility: Before patching, verify compatibility with and suitability of substrates, including compatibility with existing finishes or primers.

Proceed with installation only after unsafe or unsatisfactory conditions have been corrected.

PREPARATION

Temporary Support: Provide temporary support of Work to be cut.

Protection: Protect existing construction during cutting and patching to prevent damage. Provide protection from adverse weather conditions for portions of Project that might be exposed during cutting and patching operations.

Adjoining Areas: Avoid interference with use of adjoining areas or interruption of free passage to adjoining areas.

Existing Services: Where existing services are required to be removed, relocated, or abandoned, bypass such services before cutting to avoid interruption of services to occupied areas.

PERFORMANCE

General: Employ skilled workers to perform cutting and patching. Proceed with cutting and patching at the earliest feasible time, and complete without delay.

Cut existing construction to provide for installation of other components or performance of other construction, and subsequently patch as required to restore surfaces to their original condition.

Cutting: Cut existing construction by sawing, drilling, breaking, chipping, grinding, and similar operations, including excavation, using methods least likely to damage elements retained or adjoining construction. If possible, review proposed procedures with original Installer; comply with original Installer's written recommendations.

In general, use hand or small power tools designed for sawing and grinding, not hammering and chopping. Cut holes and slots as small as possible, neatly to size required, and with minimum disturbance of adjacent surfaces. Temporarily cover openings when not in use.

Existing Finished Surfaces: Cut or drill from the exposed or finished side into concealed surfaces.

Concrete and/or Masonry: Cut using a cutting machine, such as an abrasive saw or a diamond-core drill.

Excavating and Backfilling: Comply with requirements in applicable Division 2 Sections where required by cutting and patching operations.

Mechanical and Electrical Services: Cut off pipe or conduit in walls or partitions to be removed. Cap, valve, or plug and seal remaining portion of pipe or conduit to prevent entrance of moisture or other foreign matter after cutting.

Proceed with patching after construction operations requiring cutting are complete.

Patching: Patch construction by filling, repairing, refinishing, closing up, and similar operations following performance of other Work. Patch with durable seams that are as invisible as possible. Provide materials and comply with installation requirements specified in other Sections of these Specifications.

Inspection: Where feasible, test and inspect patched areas after completion to demonstrate integrity of installation.

Exposed Finishes: Restore exposed finishes of patched areas and extend finish restoration into retained adjoining construction in a manner that will eliminate evidence of patching and refinishing.

END OF SECTION 01045

SECTION 01050 - SELECTIVE DEMOLITION

GENERAL

SUMMARY

This Section includes demolition and removal of the following:

Selected portions of a building or structure.

Selected site elements.
Repair procedures for selective demolition operations.

See Division 2 Section "Site Clearing" for site clearing and removal of above- and below-grade improvements.

See Division 15 Sections for demolishing, cutting, patching, or relocating mechanical items.

See Division 16 Sections for demolishing, cutting, patching, or relocating electrical items.

DEFINITIONS

Remove: Detach items from existing construction and legally dispose of them off-site, unless indicated to be removed and salvaged or removed and reinstalled.

Remove and Salvage: Detach items from existing construction and deliver them to Owner ready for reuse.

Remove and Reinstall: Detach items from existing construction, prepare them for reuse, and reinstall them where indicated.

Existing to Remain: Existing items of construction that are not to be removed and that are not otherwise indicated to be removed, removed and salvaged, or removed and reinstalled.

MATERIALS OWNERSHIP

Except for items or materials indicated to be reused, salvaged, reinstalled, or otherwise indicated to remain Owner's property, demolished materials shall become Contractor's property and shall be removed from Project site. Prior to commencement of demolition operations, Owner shall identify, which shall be salvaged and delivered to him.

SUBMITTALS

Proposed Control Measures: Submit statement or drawing that indicates the measures proposed for use, proposed locations, and proposed time frame for their operation. Identify options if proposed measures are later determined to be inadequate. Include measures for the following:

Dust control.
Noise control.

Schedule of Selective Demolition Activities: Indicate detailed sequence of selective demolition and removal work, with starting and ending dates for each activity, interruption of utility services, use of elevator and stairs, and locations of temporary partitions and means of egress.

Pre-demolition Photographs or Videotape: Show existing conditions of adjoining construction and site improvements that might be misconstrued as damage caused by selective demolition operations. Submit before Work begins.

Landfill Records: Indicate receipt and acceptance of hazardous wastes by a landfill facility licensed to accept hazardous wastes.

QUALITY ASSURANCE

Demolition Firm Qualifications: An experienced firm that has specialized in demolition work similar in material and extent to that indicated for this Project.

Regulatory Requirements: Comply with governing EPA notification regulations before beginning selective demolition. Comply with hauling and disposal regulations of authorities having jurisdiction.

Standards: Comply with ANSI A10.6 and NFPA 241.

Predemolition Conference: Conduct conference at Project site.

PROJECT CONDITIONS

Owner will occupy portions of building immediately adjacent to selective demolition area. Conduct selective demolition so Owner's operations will not be disrupted. Provide not less than 48 hours' notice to Owner of activities that will affect Owner's operations.

Maintain access to existing walkways, corridors, and other adjacent occupied or used facilities.

Do not close or obstruct walkways, corridors, or other occupied or used facilities without written permission from authorities having jurisdiction.

Owner assumes no responsibility for condition of areas to be selectively demolished.

Conditions existing at time of inspection for bidding purpose will be maintained by Owner as far as practical.

Hazardous Materials: It is not expected that hazardous materials will be encountered in the Work.

Hazardous materials will be removed by Owner before start of the Work.

If materials suspected of containing hazardous materials are encountered, do not disturb; immediately notify District Project Construction Manager and Owner. Hazardous materials will be removed by Owner under a separate contract.

Storage or sale of removed items or materials on-site will not be permitted.

Utility Service: Maintain existing utilities indicated to remain in service and protect them against damage during selective demolition operations.

Maintain fire-protection facilities in service during selective demolition operations.

WARRANTY

Existing Warranties: Remove, replace, patch, and repair materials and surfaces cut or damaged during selective demolition, by methods and with materials so as not to void existing warranties.

If possible, retain original Installer or fabricator to patch the exposed Work listed below that is damaged during selective demolition. If it is impossible to engage original Installer or fabricator, engage another recognized experienced and specialized firm.

PRODUCTS

REPAIR MATERIALS

Use repair materials identical to existing materials.

If identical materials are unavailable or cannot be used for exposed surfaces, use materials that visually match existing adjacent surfaces to the fullest extent possible.

Use materials whose installed performance equals or surpasses that of existing materials.

EXECUTION

EXAMINATION

Verify that utilities have been disconnected and capped.

Survey existing conditions and correlate with requirements indicated to determine extent of selective demolition required.

Inventory and record the condition of items to be removed and reinstalled and items to be removed and salvaged.

When unanticipated mechanical, electrical, or structural elements that conflict with intended function or design are encountered, investigate and measure the nature and extent of conflict. Promptly submit a written report to District Project Construction Manager.

Engage a professional engineer to survey condition of building to determine whether removing any element might result in structural deficiency or unplanned collapse of any portion of structure or adjacent structures during selective demolition operations.

UTILITY SERVICES

Existing Utilities: Maintain services indicated to remain and protect them against damage during selective demolition operations.

Do not interrupt existing utilities serving occupied or operating facilities unless authorized in writing by Owner and authorities having jurisdiction. Provide temporary services during interruptions to existing utilities, as acceptable to Owner and to authorities having jurisdiction.

Provide at least 48 hours' notice to Owner if shutdown of service is required during changeover.

Utility Requirements: Locate, identify, disconnect, and seal or cap off indicated utilities serving areas to be selectively demolished.

Arrange to shut off indicated utilities with utility companies.

If utility services are required to be removed, relocated, or abandoned, provide temporary utilities before proceeding with selective demolition that bypass area of selective demolition and that maintain continuity of service to other parts of building.

Cut off pipe or conduit in walls or partitions to be removed. Cap, valve, or plug and seal remaining portion of pipe or conduit after bypassing.

PREPARATION

Site Access and Temporary Controls: Conduct selective demolition and debris-removal operations to ensure minimum interference with roads, streets, walks, walkways, and other adjacent occupied and used facilities.

Do not close or obstruct streets, walks, walkways, or other adjacent occupied or used facilities without permission from Owner and authorities having jurisdiction. Provide alternate routes around closed or obstructed traffic ways if required by governing regulations.
Erect temporary protection, such as walks, fences, railings, canopies, and covered passageways, where required by authorities having jurisdiction.

Protect existing site improvements, appurtenances, and landscaping to remain.

Temporary Facilities: Provide temporary barricades and other protection required to prevent injury to people and damage to adjacent buildings and facilities to remain.

Temporary Shoring: Provide and maintain interior and exterior shoring, bracing, or structural support to preserve stability and prevent movement, settlement, or collapse of construction to remain, and to prevent unexpected or uncontrolled movement or collapse of construction being demolished.

POLLUTION CONTROLS

Dust Control: Use water mist, temporary enclosures, and other suitable methods to limit spread of dust and dirt. Do not use water misting if it will contribute to hazardous conditions at the site. Comply with governing environmental-protection regulations.

Wet mop floors to eliminate trackable dirt and wipe down walls and doors of demolition enclosure. Vacuum carpeted areas.

Disposal: Remove and transport debris in a manner that will prevent spillage on adjacent surfaces and areas.

Remove debris from elevated portions of building by chute, hoist, or other device that will convey debris to grade level in a controlled descent.

Cleaning: Clean adjacent structures and improvements of dust, dirt, and debris caused by selective demolition operations. Return adjacent areas to condition existing before selective demolition operations began.

SELECTIVE DEMOLITION

General: Demolish and remove existing construction only to the extent required by new construction and as indicated. Use methods required to complete the Work within limitations of governing regulations.

Neatly cut openings and holes plumb, square, and true to dimensions required. Use cutting methods least likely to damage construction to remain or adjoining construction.

Cut or drill from the exposed or finished side into concealed surfaces to avoid marring existing finished surfaces.

Do not use cutting torches until work area is cleared of flammable materials. At concealed spaces, such as duct and pipe interiors, verify condition and contents of hidden space before starting flame-cutting operations. Maintain fire watch and portable fire-suppression devices during flame-cutting operations.

Locate selective demolition equipment and remove debris and materials so as not to impose excessive loads on supporting walls, floors, or framing.

Existing Facilities: Comply with building manager's requirements for using and protecting walkways, loading docks, building entries, and other building facilities during selective demolition operations.

Removed and Salvaged Items:

Clean salvaged items.
Store items in a secure area until delivery to Owner.
Transport items to Owner's storage area on-site.
Protect items from damage during transport and storage.

Existing Items to Remain: Protect construction indicated to remain against damage and soiling during selective demolition. When permitted by District Project Construction Manager, items may be removed to a suitable, protected storage location during selective demolition and cleaned and reinstalled in their original locations after selective demolition operations are complete.

PATCHING AND REPAIRS

General: Promptly repair damage to adjacent construction caused by selective demolition operations.

Patching: Comply with Division 1 Section "Cutting and Patching."

Repairs: Where repairs to existing surfaces are required, patch to produce surfaces suitable for new materials.

Completely fill holes and depressions in existing masonry walls that are to remain with an approved masonry patching material applied according to manufacturer's written recommendations.

Finishes: Restore exposed finishes of patched areas and extend restoration into adjoining construction in a manner that eliminates evidence of patching and refinishing.

Floors and Walls: Where walls or partitions that are demolished extend one finished area into another, patch and repair floor and wall surfaces in the new space. Provide an even surface of uniform finish color, texture, and appearance. Remove existing floor and wall coverings and replace with new materials, if necessary, to achieve uniform color and appearance.

Ceilings: Patch, repair, or re-hang existing ceilings as necessary to provide an even-plane surface of uniform appearance.

DISPOSAL OF DEMOLISHED MATERIALS

General: Promptly dispose of demolished materials. Do not allow demolished materials to accumulate on-site.

Burning: Do not burn demolished materials.

Disposal: Transport demolished materials off Owner's property and legally dispose of them.

END OF SECTION 01050

SECTION 01090 - DEFINITIONS AND STANDARDS

Definitions:

General: Except as specifically defined otherwise, the following definitions supplement definitions of the Contract, General Conditions, Supplementary Conditions and other general contract documents, and apply generally to the work.

General Requirements: The provisions of Division-I sections, General Requirements, apply to the entire work of the Contract.

Indicated: Shown on drawings by notes, graphics or schedules, or written into other portions of contract documents. Terms such as shown , noted', scheduled" and "specified" have same meaning as indicated , and are used to assist the reader in locating particular information.

Directed, Requested. Approved, Accepted, etc.: These terms imply by the Architect , unless otherwise indicated.

Approved by Architect: In no case releases Contractor from responsibility to fulfill requirements of contract documents.

Pro.iect Site: Space available to Contractor at location of project, either exclusively or to be shared with separate contractors, for performance of the work.

Furnish: Supply and deliver to project site, ready for unloading, unpacking, assembly, installation, and similar subsequent requirements.

Install: Operations at project site, including unloading, unpacking, assembly, erection, placing, anchoring, applying, working to dimension, finishing, curing, protecting, cleaning, and similar requirements.

Provide: Furnish and install, complete and ready for intended use.

Installer: Entity (firm or person) engaged to install work, by Contractor, subcontractor or sub-subcontractor. Installers are required to be skilled experts in work they are engaged to install.

Specification Text Format: Underscoring facilitates scan reading, no other meaning. Imperative language is directed at Contractor, unless otherwise noted.

Overlapping/Conflicting Requirements: Most stringent (generally) requirement written directly into the contract documents is intended and will be enforced, unless specifically detailed language written into the contract documents clearly indicates that a less stringent requirement is acceptable. Refer uncertainties to Architect for a decision before proceeding.

Minimum Requirements: Indicated requirements are for a specific minimum acceptable level of quality/quantity, as recognized in the industry. Actual work must comply (within specified tolerances), or may exceed minimums within reasonable limits. Refer uncertainties to Architect before proceeding.

Abbreviations. Plural Words: Abbreviations, where not defined in contract documents, will be interpreted to mean the normal construction industry terminology, determined by recognized grammatical rules, by the Architect. Plural words will be interpreted as singular and singular words will be interpreted as plural where applicable for context of contract documents.

Testing Laboratory: An independent entity engaged for the project to provide inspections, tests, interpretations, reports and similar services.

Standards and Regulations:

Industry Standards: Applicable standards of construction industry have same force and effect on performance of the work as if copied directly into contract documents or bound and published therewith. Standards referenced in contract documents or in governing regulations have precedence over non-referenced standards, insofar as different standards may contain overlapping or conflicting requirements. Comply with standards in effect as of date of contract documents, unless otherwise indicated.

Abbreviations: Where abbreviations or acronyms are used in contract documents, they mean the well recognized name of entity in building construction industry; refer uncertainties to Architect before proceeding, or consult "Encyclopedia of Associations by Gale Research Co.

Trade Union Jurisdictions: Maintain current information on jurisdictional matters, regulations, actions and pending actions; and administer/supervise performance of work in a manner which will minimize possibility of disputes, conflicts, delays, claims or losses .

END OF SECTION 01090

SECTION 01310 - SCHEDULES. REPORTS, PAYMENTS

Progress Schedule and Reports:

General: Within 15 days of date established for commencement of the work , submit a comprehensive bar-chart type progress schedule indicating a time bar for each significant category or unit of work to be performed at the site. Arrange schedule to indicate required sequencing of units, and to show time allowances for submittals inspections and similar time margins.

Show critical submittal dates related to each time bar, or prepare separate coordinated listing of critical submittal dates.

Submittal: Following initial revision of schedule after Architect's review, print and distribute schedule to entities with a need-to-know responsibility, including 3 copies to Architect. Post in temporary office space. Revise at intervals matching payment requests, and redistribute/repost. Provide copies required with payment requests.

Meetings and Reporting:

Proiect Meetings: Conduct general progress and coordination meetings at least once each month, attended by a representative of each primary entity engaged for performance of work. Record discussions and decisions, and distribute copies to those attending and others affected including Architect. Schedule meetings to coordinate with preparation of payment requests.

Schedule of Values:

Prepare a schedule of values to show breakdown of Contract Sum corresponding with payment request breakdown and progress schedule line items. Show dollar value and percent of total for each unit of work scheduled. Submit not less than 7 days prior to first payment request, and revise each time schedule is affected by change order or other value revision (by Contractor).

Payment Requests:

Submit request for each calendar month, not later than the 15th day of the following month. Use AIA G702, fully completed and executed. Submit the forms in triplicate, including attachment of waivers and similar documentation with one copy.

Prior to initial payment request, submit:

List of principal subcontractors and suppliers.

Schedule of values.

Progress schedule and first progress report.

Copies of building permits and similar start-up authorization or certifications.

Following issuance by Architect of ertificate of Substantial Completion, Contractor may submit pecial payment request, provided the following have been completed:

Obtain permits, certificates of inspection and other approvals and releases by governing authorities, required for Owner's occupancy and use of project.

Submit warranties and similar documentation.

Submit maintenance manuals and provide instruction of Owner's operational/maintenance personnel.

Complete final cleaning of the work.

Submit record documents.

Submit listing of work to be completed before final acceptance.

Following completion of the following requirements, final payment request may be submitted:

Complete work listed as incomplete at time of substantial completion, or otherwise assure Owner of subsequent completion of individual incomplete items.

Settle liens and other claims, or assure Owner of subsequent settlement.

Submit proof of payment on fees, taxes and similar obligations.

Transfer operational, access, security and similar provisions to Owner; and remove temporary facilities, tools and similar items.

Completion of requirements specified in Project Closeout section.

Obtain consent of surety for final payment.

END OF SECTION 01310

SECTION 01340 - SUBMITTALS

General Definitions:

Work Submittals: The provisions of this section apply to required submittals, related to units of work, not to administrative submittals including payment requests, insurance certificates and progress reports. In addition to specific provisions of General and Supplementary Conditions related to submittals, specification sections of Divisions 2 through 16 contain submittal requirements. Specific requirements in other sections have precedence over general requirements of this section.

Miscellaneous Submittals: In addition to categories of shop drawings, product data, and samples as defined by General Conditions, a category of miscellaneous submittals is required, including warranties, workmanship bonds, photographs, surveys, field records, maintenance manuals, inspection/test reports, and closeout submittals.

General: Coordinate submittals with progress schedule and actual progress of work; allow 2 weeks for Architect's initial processing of submittals requiring review and return. Use special transmittal form to establish complete record of submittals. Provide copies required by governing authorities, which are in addition to copies specified for submittal to Architect.

Copies of Shop Drawings: Initially, submit 2 blue/black-line prints; one will be returned. After approval submit 3 prints, except 5 if drawing is required in maintenance manuals, plus number required for job use and distribution; 2 will be retained and remainder will be returned. Maintain one print as mark-up copy for record drawings.

Copy of Product Data: Mark each copy to indicate actual product to be provided; show selections from among options in manufacturer's printed product data. Except as otherwise indicated, submittal is for information and record (not for Architect's approval). Submit 2 copies; plus submit 2 additional copies which will be returned where required for maintenance manuals; maintain an additional copy at project site for reference purposes. Do not proceed with installation of manufactured products until a copy of related product data is in Installer's possession at project site.

Sets of Samples: Submit 3 sets; one set will be returned. Provide 3 or more samples in each set where variations in color, pattern or texture are observable; show average condition and extreme conditions of variations. Submit full documentation with each set. Except as otherwise indicated, sample submittals are for Architect's observation of color, texture, pattern and kind, as applicable. Maintain returned set at project site, for purposes of quality control comparisons.

Copies of Miscellaneous Submittals: Except as otherwise indicated, provide copies as follows:

Project Photographs: 2 prints, plus negatives.

Survey Data: 2 copies, except provide 10 prints of completed project property survey.

Special Project Warranties: 2 executed copies, plus conformed copies as required in maintenance manuals.

Specified Product Warranties: 2 executed copies, plus conformed copies as required in maintenance manuals.

Coincidental Product Warranties: Single copy, plus copies as required for maintenance manuals.

Inspection/Test Reports and Certificates: Where not processed as shop drawings or product data, provide 2 copies plus copies required for maintenance manuals.

Field Records: 4 copies, including one copy which will be returned for inclusion in submittal of record documentation.

Maintenance Manuals: 2 bound copies.

Record Drawings: Original maintained mark-up prints, plus 2 photographic copies which may, at Contractor's option, be reduced to not less than half size (50% reduction of width and length).

Miscellaneous Record Documentation: Original maintained marked up copy.

Architect's Action:

General: Refer to General Conditions for indication and definition of action by Architect upon receipt and processing of submittals from Contractor. Submittals will be returned without action where received indirectly (not through Contractor). When possible, Architect's will return submittal within two (2) weeks of receipt of submittal and within three (3) weeks for submittals requiring engineer or other consultant review. Where submittal must be held for coordination, Architect will process submittal as soon as possible after all coordination information and material is provided by contractor.

NOTE: ALL COLOR SELECTION SUBMITTALS WILL BE HELD UNTIL CONTRACTOR NOTIFIES A/E THAT ALL SELECTIONS FOR WORK ARE SUBMITTED. A COLOR BOARD PRESENTATION WILL THEN BE PREPARED BY ARCHITECT FOR OWNER'S REVIEW AND APPROVAL; ALLOW FIVE (5) WEEKS FOR THIS PROCESS.

B. Marking: "A" Action: Work may proceed provided it complies with contract documents.

C. Marking: "B" Action: Work may proceed provided it complies with notations and corrections on submittal and with contract documents.

D. Marking: Action "R": Do not proceed with the work. Revise submittal in accordance with the notations thereon, and resubmit without delay to obtain a different action marking. Do not allow these submittals with this marking (or unmarked submittals where a marking is required) to be used in connection with performance of the work.

E. Marking: Action "X": Do not proceed with the work. Submittal is returned for other reasons, with Architect's explanation included.

F. Action Stamp: Architect's action stamp, for use on submittals to be returned to Contractor, is self-explanatory as marked.

G. NOTE: The contractor shall not be relieved of responsibility for deviations from requirements of the contract documents by the Architect's's approval of shop drawings, product data, samples, or similar subminals unless the contractor has specifically informed the Architect's, in writing and on the submittal, of such deviation at the time of submittal and the Architect's has given written approval to the specific deviation. The contractor shall not be relieved of responsibility for errors or omissions in shop drawings, product data, samples, or similar submittals by the Architect's's approval thereof.

Final Unristricted Release: Work may proceed, provided it complies with contract documents, when submittal is returned with the following:

Marking: "A Action".

Final But Restricted Release: Work may proceed, provided it complies with notations and corrections on submittal and with contract documents, when submittal is returned with the following:

Marking: "B Action".

Returned For Resubmittal: Do not proceed with work. Revise submittal in accordance with notations thereon, and resubmit without delay to obtain a different action marking. Do not al low submittals with the following marking (or unmarked submittals where a marking is required) to be used in connection with performance of the work:

Marking: "Action R".

Other Action: Where submittal is returned for other reasons, with Architect's explanation included, it will be marked as follows:

Marking: "Action X".

Action Stamp: Architect's action stamp, for use on submittals to be returned to Contractor, is self-explanatory as marked.

END OF SECTION 01340

SECTION 01400 - QUALITY CONTROL SERVICES

Description: Quality control services include inspections and tests performed by independent agencies and governing authorities, as well as by the Contractor. Inspection and testing services are intended to determine compliance of the work with requirements specified. Specific quality control requirements are specified in individual specification sections.

Responsibilities:

Contractor Responsibilities: Except where indicated as being the Owner's responsibility, quality control services are the Contractor's responsibility, including those specified to be performed by an independent agency and not by the Contractor. The Contractor shall employ and pay an independent agency, testing laboratory or other qualified firm to perform quality control services specified.

The Contractor will engage and pay for services of an independent agency to perform all inspections and tests required by these specifications.

Retest Responsibility: Where results of inspections or tests do not indicate compliance with contract document, retests are the Contractor's responsibility.

Responsibility for Associated Services: The Contractor shall cooperate with independent agencies performing inspections or tests. Provide auxiliary services as are reasonable. Auxiliary services include:

Provide access to the work.
Assist taking samples.
Deliver samples to test laboratory.

Coordination: The Contractor and independent test agency shall coordinate the sequence of their activities. Avoid removing and replacing work to accomodate inspections and tests. The Contractor is responsible for scheduling times for inspections and tests.

Qualifications for Service Agencies: Engage inspection and test service agencies which are prequalified as complying with Recommended Requirements for Independent Laboratory Qualification by the American Council of Independent Laboratories.

Submittals: Submit a certified written report of each inspection, test or similar service, in duplicate to the Architect. Submit additional copies of each report to governing authority, when the authority so directs.

Report Data: Written inspection or test reports shall include:

Name of testing agency or test laboratory.
Dates and locations of samples, tests or inspections.
Names of individuals present.
Complete inspection or test data.
Test results. Interpretations.
Recommendations.

Repair and Protection: Upon completion of inspection or testing repair damaged work and restore substrates and finishes. Comply with requirements for Cutting and Patching .

END OF SECTION 01400

SECTION 01505 - TEMPORARY FACILITIES

General: Definitions:

Refer to General Conditions for basic commitments to provide temporary facilities. This section specifies certain minimum temporary facilities to be provided, regardless of methods and means selected for performance of the work, but not by way of limitation and not assured for compliance with governing regulations. Use of alternate temporary facilities is Contractor's option, subject to Architect's acceptance. Temporary facilities is defined to exclude tools and construction machines, testing, demolition, alterations, soil borings, mock-ups and similar items.

Costs: Except as otherwise indicated, costs associated with temporary facilities are Contractor's (in Contract Sum), including power/fuel/water/telephone usage until time of substantial completion for each major area of project. Temporary facilities remain property of Contractor.

Temporary Utility Services:

Important Note: Contact all utility companies to identify and verify the location of all underground utilities prior to excavations or to starting any construction operations.

Sources: Connect with local/municipal services and franchised utility companies where feasible.

Water: Potable.

Changeover: At earliest feasible date, use permanent utility services installed for project, and disconnect and remove temporary service lines.

Sewers: At time of substantial completion, clean sewers which have been affected by discharge of waste water or runoff from project during construction. Comply with governing regulations and requests by authorities.

Temporary Construction Facilities:

Water Distribution: Minimum 1 pipe size, with 3/4' hose outlets and vacuum breakers, space to reach points of use with 100' maximum length of hose. Maintain 3/4" x 100' hose at each outlet, for both general use and incidental fire protection.

Protect water distribution from freezing, by drainage, insulation or temporary heating.

Dewatering: Maintain site and construction work free of water accumulation. Do not endanger the work or adjacent properties. Maintain protection against flooding.

Enclosure: Provide fire-retardant tarpaulins with UL label and flame-spread of 15 or less; reinforced translucent type where daylighting would be useful for performance of work. Use a minimum of wood framing and plywood enclosure; or, where expanse exceeds 100 sq. ft. area, use fire-retardant UL labeled "A" plywood. Enclose spaces requiring temporary heat, and other spaces where work would otherwise be adversely affected.

Temporary Heating: Until the time M/E systems of project can be used to provide temporary heat, provide gas/oil fired space heaters which are UL labeled and approved for construction space heating by appropriate agency. Provide adequate ventilation and thermostatic control.

Humidity Control: Delay work which is indicated to be performed or maintained under controlled humidity conditions, until permanent HVAC system is operable and can be mai ntai ned i n operation to provide required conditions.

Power Distribution: Provide weatherproof, grounded circuits with ground-fault interruption features, with proper power characteristics and either permanently wired or plug-in connections as appropriate for intended use. Provide overloadprotected disconnect switch for each circuit at distribution panel. Space 4-gang convenience outlets (20 Amp circuit) so that every portion of work can be reached with 100' extension cord.

Temporary Lighting: Provide lighting of intensity and quality sufficient for proper and safe performance of the work, and for access thereto and security thereof.

Temporary Roads: Where feasible, use subbase and base construction of permanent roads and paving as temporary roadways and paved construction areas; and delay installation of finish paving courses until possibility of damage from construction operations has passed. Otherwise, provide not less than compacted subgrade of satisfactory soil material, 3" compacted gravel paving course, and road oil dust control treatment; remove temporary paving when no longer needed.

Miscellaneous Facilities: Provide miscellaneous facilities as needed, including temporary stairs, temporary treads on permanent stairs, ramps, ladders, runways, staging, shoring, scaffolding, bridges, railings, bracing, barriers, closures, platforms, temporary partitions, waste chutes and similar items.

Temporary Support Facilities:

General: Provide facilities and services may be needed to properly support primary construction process and meet governing regulations. Do not use permanent facilities except as otherwise indicated, and except after time of substantial completion.

Field Office and Sheds: Contractor shall furnish field office and equipment and material storage sheds to meet his and his subcontractor's needs.

Drinking Water: Provide either pipe-connected potable water fountains or electric cooled bottled water fountains; spaced so that personnel at site will travel no more than 300', including 2 stories vertically, to reach a fountain.

Toilets: Where permitted by governing regulations, provide single-occupant, self-contained units; glass fiber reinforced polyester enclosure; equipped with both urinal and stool fixtures.Supply units with tissue and, where not located near separate wash facilities, supply with wet-type hand towels and waste containers. Locate units so that personnel will travel no more than 300', including 2 stories vertically, to reach a unit.

Project Identification Sign: Prepare temporary signs of sizes and at locations indicated, or if not otherwise indicated, including one 8' x 8' x 3/4 exterior grade plywood sign, properly supported with bottom 6'-0' above grade. Engage professional sign painter to apply graphics and lettering as indicated or prescribed by Architect. Do not allow installation of other signs.

Provide illumination of sign from dusk until 10:00 PM each day (7 days per week).

Telephones: Contractor shall furnish telephone service to the job.

Security and Protection:

General: Provide facilities and services as necessary to effectively protect project from losses and persons from injury during the course of construction. Contractor shall keep building and site clean to facilitate work and safety. Comply with all laws governing safety, specifically the "Occupational Safety and Health Standards" (OSHA). The Constractor shall be responsible for initiating, maintaining, and supervising for conformance to all safety programs and precaustions necessary for compliance with all local, state, and federal codes and requirements.

Fire Protection: In addition to temporary water service for construction, and the placing of permanent fire protection facilities in operating condition at earliest feasible date, provide fire extinguishers of types and sizes recommended by NFPA. Provide Type A extinguishers in Field Offices and for similar exposures; Type

ABC in construction areas. Locate extinguishers on each story of construction, near each entrance and stairway. Prohibit smoking except in marked, non-hazardous areas.

Barricades: Provide barricades at hazardous locations, complete with signs, general lighting, warning lights and similar devices where appropriate or required by regulations.

Fence: Install permanent fencing, specified in Division-2 sections, at earliest feasible date; provide temporary entrance gates. Replace gates with permanent gates near time of substantial completion.

Lockup and Security: As construction of building structure or shell progresses and it becomes feasible to secure project against intrusion, provide temporary security enclosure, doors and locks as necessary to prevent unauthorized entrance.

Watchman Service: When work at site has progressed so as to become attractive for vandalism or theft, engage a recognized guard agency to provide watchman service at times when tradesmen are not present in substantial numbers. Continue service until after time of substantial completion.

END OF SECTION 01505

SECTION 01605 - PRODUCTS AND SUBSTITUTIONS

Procedural Requirements:

General Limitations: Where possible, provide entire required quantity of each generic product, material or equipment from a single source; and, where not possible to do so, match separate procurements as closely as possible. To extent selection process is under Contractor's control, provide compatible products, material and equipment. Where available and complying with requirements, provide standard products which have been used previously and successfully in similar applications, and which are recommended by manufacturers for applications indicated.

Product Selection Limitations:

Product Selections: Comply with the following for selection of products, materials and equipment:

Or Equal Clause: Provide named product which complies with requirements, or comply with requirements for gaining approval on "substitution to select and use an unnamed product.

Compliance with Standards:Selection of product which complies with requirements, including applicable standards, is Contractor's option where no product names are indicated.

Performance Requirements: Selection of product which has been tested to show compliance with requirements, including indicated performances, is Contractor's option where no product names are indicated.

Prescriptive Requirements: Selection of product which has been certified by manufacturer to comply with requirements, including prescriptive requirements, is Contractor's option where no product names are indicated.

Visual Requirements: Where indicated to be selected from manufacturer's standard options, selection is Architect's option, subsequent to determination or selection of manufacturer (Contractor's option). Where indicated to be selected from among standard options available with industry, selection is Architect's option prior to determination or selection of manufacturer.

Nameplates: Where indicated or needed for operation and maintenance, provide permanent nameplates on equipment, located in inconspicuous but accessible places, and containing suitable information and operational data. Otherwise, do not allow manufacturer's trademarks or similar labels or nameplates to be placed on products in locations where exposed to view after installation.

Substitutions:

Conditions: Refer to Supplementary Conditions. Requests by Contractor will be considered when reasonable, timely, fully documented and qualifying under one or more of following circumstances;

Related to an "or equal" or similar provision in contract documents.

Required product cannot be supplied in time for compliance with Contract Time requirements.

Required product is not acceptable to governing authority, or determined to be non-compatible, or cannot be properly coordinated, warranted or insured, or has other recognized disability as certified by Contractor.

Substantial advantage is offered Owner after deducting offsetting disadvantages including delays, additional compensation to Architect for redesign, investigation, evaluation and other necessary services, and similar considerations.

Submittals: Include full documentation, including product data, samples where appropriate, detailed performance comparisons and evaluation, testing laboratory reports where applicable, coordination information for effect on other work and time schedule, cost information for proposed change order, Contractor's general certification of recommended substitution, and similar information germane to circumstance.

Change Order: Approval of substitutions is possible only by change order procedure.

Deliverv. Storage and Handling:

General: Receive, store and handle products, materials and equipment in a manner which will prevent loss, deterioration and damage. Schedule deliveries to minimize long-term storage at project site.

Warranties (Guarantees):

Categories of warranties required for the work include: 1) Special project warranty issued by Contractor and, where required, countersigned by Installer or other recognized entity involved in performance of the work; 2) Specified product warranty issued by a manufacturer or fabricator, for compliance with requirements in contract documents; and 3) Coincidental product warranty available on a product incorporated into the work, by virtue of manufacturer's publication of warranty without regard for application requirements (non-specified warranty).

Refer to sections of Divisions 2 through 16 for requirements of specified warranties.

Warranty Obligations: Restore or remove-and-replace warranted work to its originally specified condition, at such time during warranty as it does not comply with or fulfill terms of warranty. Restore or remove-and-replace other work which has been damaged by failure of warranted work, or which must be removed and replaced to gain access to warranted work. Except as otherwise indicated or required by governing regulations, warranties do not cover consequential damages to property other than work of the Contract, (e.g., building contents). Cost of restoration or removal-and-replacement is Contractor's obligation, without regard to whether Owner has already benefited from use of failing work.

> Reinstatement of Warranty: Upon restoration or removal-andreplacement of warranted work which has failed, reinstate the warranty by issuing newly executed form, for a least the remaining period of time of the original warranty, but for not less than half of the original warranty period.

Owner's Recourse: Warranties and warranty periods do not diminish implied warranties, and do not deprive

Owner of actions, rights and remedies otherwise available for Contractor's failure to fulfill requirements of the contract documents. Owner reserves right to reject coincidental product warranties considered to be conflicting with or detracting from requirements of the contract documents.

END OF SECTION 01605

SECTION 01705 - PROJECT CLOSEOUT

General Definitions:

The provisions of this section apply primarily to closeout of actual physical work, not to administrative matters such as final payment and changeover of insurances. Closeout requirements relate to both final completion and substantial completion of work, and apply to individual portions of completed work as well as the total work. Specific requirements in other sections have precedence over general requirements of this section.

Procedures at Substantial Completion:

Prerequisites: Comply with General Conditions and complete the following before requesting Architect's inspection of the work, or designated portion thereof, for substantial completion:

Submit executed warranties, workmanship bonds, maintenance agreements, inspection certificates and similar required documentation for specific units of work, enabling Owner's unrestricted occupancy and use.

Submit record documentation, maintenance manuals, tools, spare parts, keys and similar operational items.

Complete instruction of Owner's operating personnel, and start-up of systems.

Complete final cleaning, and remove temporary facilities and tools.

Inspection Procedures: After completion of the Contractors' own final punchlist items and upon receipt of Contractor's request, Architect will either proceed with inspection or advise Contractor of prerequisites not fulfilled. Observation of sight apparent deficiencies will be sufficient to cancel the inspection. Following the successful initial inspection, the Architect will either prepare the certificate of substantial completion, or advise Contractor of work which must be performed prior to issuance of certificate; and repeat inspection when requested and assured that work has been substantially completed. Results of completed inspection will form initial "punch-list" for final acceptance.

Procedures at Final Acceptance:

ReinsDection Procedure: Upon receipt of Contractor's notice that work has been completed, including punch-list items resulting from earlier inspections, and excepting incomplete items delayed because of acceptable circumstances, Architect will reinspect work. Upon completion of reinspection, Architect will either recommend final acceptance and final payment, or advise Contractor of work not completed or obligations not fulfilled as required for final acceptance. If necessary, procedure will be repeated.

Record Documentation:

Record Drawings: Maintain a complete set of blue/black-line prints of contract drawings and shop drawings for record mark-up purposes throughout the Contract Time. Mark-up drawings during the course of the work to show changes and actual installation conditions, sufficient to form a complete record for Owner's purposes. Give particular attention to work which will be concealed and difficult to measure and record at a later date, and work which may require servicing or replacement during life of project. Require entities marking the prints to sign and date each mark-up. Bind prints into manageable sets, with durable paper covers, appropriately labeled.

Maintenance Manuals: Provide 3-ring vinyl-covered binders containing required maintenance manuals, properly identified and indexed. Include operating and maintenance instructions; extended to cover

omergencies, spare parts, warranties, inspection procedures, diagrams, safety, security, and similar appropriate data for each system or equipment item.

General Closeout Requirements:

Operator Instructions: Require each Installer of systems requiring continued operation/maintenance by Owner's operating personnel, to provide on-location instruction to Owner's personnel, suf~icient to ensure safe, secure, efficient, nonfailing utilization and operation of systems. Provide instructions for the following categories of work:

Mechanical/electrical/electronic systems (not limited to work of Divisions 15 and 16).
Live plant materials and lawns.
Roofing, flashing, joint sealers. Floor finishes.

Final Cleaning: At closeout time, clean or reclean entire work to normal level for "first class" maintenance/ cleaning of building projects of a similar nature. Remove non-permanent protection and labels, po1ish glass, cleaned exposed finishes, touch-up minor finish damage, clean or replace filters of mechanical systems, remove debris and broom-clean non-occupied spaces, sanitize plumbing/food service facilities, clean light fixtures and replace burned-out/dimmed lamps, sweep and wash paved areas, police yards and grounds, and perform similar cleanup operations needed to produce a "clean" condition as judged by Architect.

END OF SECTION 01705

DIVISION 2 SITE WORK

02100 SITE CLEARING

Traffic: Conduct site clearing operations to ensure minimum interference with roads, streets, walks, and other adjacent occupied or used facilities. Do not close or obstruct streets, walks or other occupied or used facilities without permission from authorities having jurisdiction.

Protections: Provide temporary fences, barricades, coverings, or other protections to preserve existing items indicated to remain and to prevent injury or damage to person or property. Apply protections to adjacent properties as required.

Restore Damaged work to condition existing prior to the start of work, unless otherwise directed.

Site clearing: Remove trees, shrubs, grass, and other vegetation, improvements, or obstructions as indicated or which interfere with new construction, including those portions of the existing structure which require demolition. Removal includes digging out building foundations, stumps and roots.

Strip and stockpile topsoil that will be reused in the work.

Fill below-grade areas and voids resulting from demolition operations. Use satisfactory soil materials, placed in 6 deep horizontal layers with each layer thoroughly compacted.

Grade ground surface to conform to required contours and to provide surface drainage.

Dispose of removed and demolished items, including trash and debris, off the Owner's property.

Burning of waste materials on the site is not permitted.

END OF SECTION 02100

02200 EARTHWORK

PART 1-GENERAL

RELATED DOCUMENTS:

Drawings and general provisions of the Contract, including General and Supplementary Conditions and Division-I Specification sections, apply to work of this section.

DESCRIPTION OF WORK:

Extent of earthwork is indicated on drawings.

Preparation of subgrade for building slabs, walks, and pavements is included as part of this work.

Drainage fill course for support of building slabs is included as part of this work.

Backfilling of trenches within building lines is included as part of this work.

Excavation for Mechanical/Electrical Work: All excavation and backfill required in conjunction with underground mechanical and electrical utilities, and buried mechanical and electrical appurtenances is included as work of this section. NOTIFY AND COORDINATE WITH ALL UTILITY PROVIDERS TO VERIFY AND LOCATE ALL UNDERGROUND UTILITIES PRIOR TO BEGINNING OPERATIONS AT THE SITE.

Definition: Excavation consists of removal of material encountered to subgrade elevations indicated and subsequent disposal of materials removed.

QUALITY ASSURANCE:

Codes and Standards: Perform excavation work in compliance with applicable requirements of governing authorities having jurisdiction.

Testing and Inspection Service:

Contractor will engage an independent Testing and Inspection service for quality control testing during earthwork operations.

SUBMITTALS:

Test Reports-Excavating: Submit following reports directly to Architec/Engineer from the testing services, with copy to Contractor:

Test reports on borrow material.
Verification of each footing subgrade.
Field density test reports.
one optimum moisture-maximum desity curve for each type of soil encountered.
Report on actual unconfined compressive strenght and/or results of bearing tests of each strata tested.

JOB CONDITIONS:

Existing Utilities: Locate existing underground utilities in areas of work, prior to commencing construction operations. If utilities are to remain in place, provide adequate means of support and protection during earthwork operations.

Should uncharted, or incorrectly charted, piping or other utilities be encountered during excavation, consult utility owner immediately for directions. Cooperate with owner and utility companies in keeping respective services and facilities in operation. Repair damaged utilities to satisfaction of utility owner.

Do not interrupt existing utilities serving facilities occupied and used by Owner or others, during occupied hours, except when permitted in writing by Architect and then only after acceptable temporary utility services have been provided.

Protect structures, utilities, sidewalks, pavements, and other facilities from damage caused by settlement, lateral movement, undermining, washout and other hazards created by earthwork operations.

PART 2 - PRODUCTS

SOIL MATERIALS:

Definitions:

Satisfactory soil materials are defined as those complying with ASTM D2487 soil classification groups GW, WP, GM, SM, SW, and SP.

Unsatisfactory soil materials are defined as those complying with ASTM D2487 soil classification groups GC, SC, ML, CL, CH, OL, OH, and PT.

Subbase Material: Naturally or artificially graded mixture of natural or crushed gravel, crushed stone, crushed slag, natural or crushed sand.

Drainage Fill: Washed, evenly graded mixture of crushed stone, or crushed or uncrushed gravel, with 100% passing a 1-1/2" sieve and not more that 5% passing a No. 4 sieve.

Bakfill and Fill Materials: Staisfactory soil materials free of clay, rock or gravel larger than 2" in any dimesion, debris, waste, frozen materials, vegetable and other matter.

PART 3 - EXECUTION

EXCAVATION:

Excavation is unclassified, and includes excavation to subgrade elevations indicated, regardless of character of materials and obstructions encountered.

Earth Excavation includes excavation of pavements and other obstructions visible on ground surface; underground structures, utilities, and other items indicated to be demolished and removed; together with earth and other materials encountered that are not classified as rock or unauthorized excavation.

Unauthorized excavation consists of removal of materials beyond indicated subgrade elevations or dimensions without specific direction of Architec/Engineer. Unauthorized excavation, as well as remedial work directed by Architect, shall be at Contractor's expense.

Under footings, foundation bases, or retaining walls, fill unauthorized excavation by extending indicated bottom elevation of footing or base to excavation bottom, without altering required too elevation. Lean concrete fill may be used to bring elevations to proper position, when acceptable to Architect.

Stability of Excavations: Slope sides of excavations to comply with local codes and ordinances having jurisdiction. Shore and brace where sloping is not possible because of space restrictions or stability of material excavated.

Maintain sides and slopes of excavations in safe condition until completion of backfilling.

Establish requirements for trench shoring and bracing to comply with local codes and authorities having jurisdiction.

Material Storage: Stockpile satisfactory excavated materials where directed, until required for backfill or fill. Place, grade and shape stockpiles for proper drainage.

Dispose of excess soil material and waste materials as herein specified.

In excavating for footings and foundations, take care not to disturb bottom of excavation. Excavate by hand to final grade just before concrete reinforcement is placed. Trim bottoms to required lines and grades to leave solid base to receive other work.

Except as otherwise indicated, excavate for exterior waterbearing piping (water, steam, condensate, drainage) so top of piping is not less than 3'-6" below finished grade.

Concrete is specified in Division 3.

Do not backfill trenches until tests and inspections have been made and backfilling authorized by Architect. Use care in backfilling to avoid damage or displacement of pipe systems.

Compaction: Control soil compaction during construction providing minimum percentage of density specified for each area classification indicated below.

Percentage of Maximum Density Requirements: Compact soil to not less than the following percentages of maximum density for soils which exhibit a well-defined moisture density relationship (cohesive soils) determined in accordance with ASTM D 1557; and not less than the following percentages of relative density, determined in accordance with ASTM D 2049, for soils which will not exhibit a well-defined moisture-density relationship (cohesionless soils).

Structures, Building Slabs and Steps, Pavements: Compact top 12" of subgrade and each layer of backfill or fill material at 90% maximum density for cohesive material or 95% relative density for cohesionless material.

Lawn or Unpaved Areas: Compact top 6" of subgrade and each layer of backfill or fill material at 85% maximum density for cohesive materials and 90% relative density for cohesionless soils .

Walkways: Compact top 6" of subgrade and each layer of backfill or fill material at 09% maximum density for cohesive material or 95% relative density for cohesionless material.

Moisture Control: Where subgrade or layer of soil material must be moisture conditioned before compaction, uniformly apply water to surface of subgrade, or layer of soil material. Apply water in manner to prevent free water appearing on surface during or subsequent to compaction operations.

Remove and replace, or scarify and air dry, soil material that is too wet to permit compaction to specified density.

Soil material that has been removed because it is too wet to permit compaction may be stockpiled or spread and allowed to dry. Assist drying by discing, harrowing or pulverizing until moisture content is reduced to a satisfactory value.

Backfill and Fill: Place acceptable soil material in layers to required subgrade elevations, for each area classification listed below.

In excavations, use satisfactory excavated or borrow material.

Under grassed areas, use satisfactory excavated or borrow material.

Under walks and pavements, use subbase material, or satisfactory excavated or borrow material, or combination of both.

Under steps, use subbase material.

Under building slabs, use drainage fill material.

Under piping and conduit, use subbase material where subbase is indicated under piping or conduit; shape to fit bottom 90% of cylinder.

Backfill excavations as promptly as work permits, but not until completion of the following:

Acceptance of construction below finish grade including, where applicable, dampproofing, waterproofing, and perimeter insulation.

Inspection, testing, approval, and recording locations of underground utilities.

Removal of concrete formwork.

Removal of trash and debris.

Ground Surface Preparation: Remove vegetation, debris, unsatisfactory soil materials, obstructions, and deleterious materials from ground surface prior to placement of fills. Plow, strip, or break-up sloped surfaces steeper than 1 vertical to 4 horizontal so that fill material will bond with existing surface.

When existing ground surface has a density less than that specified under Compaction for particular area classification, break up ground surface, pulverize, moisture-condition to optimum moisture content, and compact to required depth and percentage of maximum density.

Placement and Compaction: Place backfill and fill materials in layers not more than 8 "in loose depth for material compacted by heavy compaction equipment, and not more than 4" in loose depth for material compacted by hand-operated tampers.

Before compaction, moisten or aerate each layer as necessary to provide optimum moisture content. Compact each layer to required percentage of maximum dry density or relative dry density for each area classification. Do not place backfill or fill material on surfaces that are muddy, frozen, or contain frost or ice.

Place backfill and fill materials evenly adjacent to structures, piping or conduit to required elevations. Take care to prevent wedging action of backfill against structures or displacement of piping or conduit by carrying material uniformly around structure, piping or conduit to approximately same elevation in each lift.

Grading: Uniformly grade areas within limits of grading under this section, including adjacent transition areas. Smooth finished surface within specified tolerances, compact withuniform levels or slopes between points where elevations are indicated, or between such points and existing grades.

Grading Outside Building Lines: Grade areas adjacent to building lines to drain away from structures and to prevent ponding.

Finish surfaces free from irregular surface changes, and as follows:

Lawn or Unpaved Areas: Finish areas to receive topsoil to within not more than 0.10' above or below required subgrade elevations.

Walks: Shape surface of areas under walks to line, grade and cross-section, with finish surface not more than 0.10' above or below required subgrade elevation.

Pavements: Shape surface of areas under pavement to line, grade and cross-section, with finish surface not more than 1/2 above or below required subgrade elevation.

Grading Surface of Fill Under Building Slabs: Grade smooth and even, free of voids, compacted as specified, and to required elevation. Provide final grades within a tolerance of 1/2" when tested with a 10' straightedge.

Compaction: After grading, compact subgrade surfaces to the depth and indicated percentage of maximum or relative density for each area classification.

Pavement Subgrade Course: See other Division 2 sections for paving specifications.

Grade Control: During construction, maintain lines and grades including crown and cross-slope of subbase course.

Placing: Place subbase course material on prepared subgrade in layers of uniform thickness, conforming to indicated crosssection and thickness. Maintain optimum moisture content for compacting subbase material during placement operations.

When a compacted subbase course is shown to be 6" thick or less, place material in a single layer. When shown to be more than 6" thick, place material in equal layers, except no single layer more than 6" or less than 3" in thickness when compacted.

Maintenance:

Protection of Graded Areas: Protect newly graded areas from traffic and erosion. Keep free of trash and debris.

Repair and re-establish grades in settled, eroded, and rutted areas too specified tolerances.

Reconditioning Compacted Areas: Where completed compacted areas are disturbed by subsequent construction operations or adverse weather, scarify surface, re-shape, and compact to required density prior to further construction.

Settling: Where settling is measurable or observable at excavated areas during general project warranty period, remove surface (pavement, lawn or other finish), add backfill material, compact, and replace surface treatment. Restore appearance, quality, and condition of surface or finish to match adjacent work, and eliminate evidence of restoration to greatest extent possible.

Disposal of Excess Materials and Waste Materials: Transport waste material, including unacceptable excavated material, trash and debris to designated spoil areas on Owner's property and dispose of as directed.

Removal from Owner's Property: Remove waste materials, including unacceptable excavated material, trash and debris, and dispose of it off Owner's property.

Remove excess excavated material, trash, debris and waste materials and dispose of it off Owner's property.

END OF SECTION 02200

02280 TERMITE CONTROL

PART 1 - GENERAL

Related Documents: Drawings and general provisions of Contract, including General and Supplementary Conditions and Division-I Specification sections, apply to work of this section.

Description of Work: Provide soil treatment for termite control, as herein specified.

Quality Assurance: In addition to requirements of these specifications, comply with manufacturer's instructions and recommendations for work, including preparation of substrate and application.

Engage a Professional Pest control operator, licensed in accordance with regulations of governing authorities for application of soil treatment solution.

JOB CONDITIONS:

Restrictions: Do not apply soil treatment solution until excavating, filling and grading operations are completed, except as otherwise required in construction operations.

To insure penetration, do not apply soil treatment to frozen or excessively wet soils or during inclement weather. Comply with handling and application instructions of the soil toxicant manufacturer.

SUBMITTALS:

Product Data: Submit manufacturer's technical data and application instructions.

Specific Product Waranty: Furnish written warranty certifying that applied soil poisoning treatment will prevent infestation of subterranean termites and, that if subterranean termite activity is discovered during warranty period, Contractor will re-treat soil and repair or replace damage caused by termite infestation. Provide warranty for a period of 2 years from date of treatment, signed by Applicator and Contractor.

PART 2 - PRODUCTS

Soil Treatment Solution: Use an emulsible concentrate insecticide for dilution with water, specially formulated to prevent infestation by termites. Fuel oil will not be permitted as a dilutent. Provide a working solution of one of following chemical elements and concentrations:

Chlordane, 1.0% in water emulsion.

Aldrin, 0.5% in water emulsion.

Dieldrin, 0.5% in water emulsion.

Heptachlor, 0.5% in water emulsion.

Chlordane and Heotachlor, 0.5% chlordane plus 0.25% Heptachlor in water emulsion.

Other solutions may be used as recommended by Applicator and if acceptable to Architect and local governing authorities. Use only soil treatment solutions which are not injurious to planting.

PART 3 - EXECUTION

Application:

Surface Preparation: Remove foreign matter which could decrease effectiveness of treatment on areas to be treated. Loosen, rake, and level soil to be treated, except previously compacted areas under slabs and foundations. Toxicants may be applied before placement of compacted fill under slabs, if recommended by toxicant manufacturer.

Application Rates: Apply soil treatment solution as follows:

Under slab-on-grade structures, treat soil before concrete slabs are placed using either power sprayer or tank-type garden sprayer.

Apply 4 gallons of chemical solution per 10 lin. ft. to soil critical areas under slab, including entire inside perimeter inside of foundation walls, along both sides of interior partition walls, and around plumbing pipes and electric conduit penetrating slab, and around interior column footers.

Apply one gallon of chemical solution per 10 sq. ft. as an overall treatment under slab and attached slab areas where fill is soil or unwashed gravel. Apply 1-1/2 gallons of chemical solution to areas where fill is washed gravel or other coarse absorbent material.

Apply 4 gallons of chemical solution per 10 lin. ft. of trench, for each foot of depth from grade to footing, along outside edge of building. Dig a trench 6" to 8" wide along outside of foundation to a depth of not less than 12". Punch holes to top of footing at not more than 12" o.c. and apply chemical solution. Mix chemical solution with the soil as it is being replaced in trench.

Allow not less than 12 hours for drying after application, before beginning concrete placement or other construction activities.

Post signs in areas of application warning workers that soil poisoning has been applied. Remove signs when areas are covered by other construction.

Reapply soil treatment solution to areas disturbed by subsequent excavation or other construction activities following application.

END OF SECTION 02280

SECTION 02821 - CHAIN-LINK FENCES AND GATES

GENERAL

SUMMARY
This Section includes the following:

Galvanized steel chain-link fabric.
Galvanized steel framework.
See Division 16 Sections for electrical service and connections for motor operators, controls, limit switches, and other powered devices and for system disconnect switches.

SUBMITTALS

Product Data: For each product indicated.

Shop Drawings: Show locations, components, materials, dimensions, sizes, weights, finishes of components, installation and operational clearances, gate swings, and details of post anchorage and attachment and bracing.

PRODUCTS

CHAIN-LINK FENCE FABRIC

Steel Chain-Link Fence Fabric: Comply with Chain Link Fence Manufacturers Institute's "Product Manual."
Mesh and Wire Size: **2-inch** mesh, **0.148-inch** diameter.
Zinc-Coated Fabric: ASTM A 392, with zinc coating applied to steel wire mesh fabric after weaving with Class 1, 1.2-oz./sq. ft. minimum coating weight.

FENCE AND GATE FRAMING

Round Posts and Rail: ASTM F 761.

Fence Height: More than **4 feet** high and not exceeding **6 feet** high.

Line, End, Corner, and Pull Posts and Top Rail: As required for Medium-Duty fence.

Gate Posts, Gates, and Accessories: Comply with ASTM F 654, gate type as indicated, made from galvanized steel metal pipe and tubing for individual gate widths **48 inches** or less, more than **48 inches** and not exceeding **84 inches**, complete with hardware.

Protective Coating for Steel: Posts, rails, and frames protected with an external coating of not less than 0.6 oz. of zinc/sq. ft., a chromate conversion coating, and a clear, verifiable polymer film; and an internal protective coating of not less than 0.6 oz. of zinc/sq. ft. or 81 percent, not less than 0.3-mil- thick, zinc pigmented coating.

GATES
Swing Gates: Comply with ASTM F 900 for single or double gates, made from pipe and tubing complying with ASTM F 1043, complete with hardware.

Frames and Bracing: For gate fabric height **6 feet** or less or more than **6 feet**.

Corners: Welded.

Gate Posts: Fabricate members from round galvanized steel pipe for gate fabric heights by leaf widths indicated.

Horizontal Slide Gates: Comply with ASTM F 1184 for single or double gates, made from pipe and tubing complying with ASTM F 1043, complete with hardware.
Type: Cantilever Slide, Class 1 with external roller assemblies.

Frames and Bracing: Fabricate members from round galvanized steel pipe for the gate type, fabric height, opening width, and overhead clearance indicated.

Corners: Welded.

Overhead Track Assembly for Type I Gates: Manufacturer's standard track, with overhead framing supports, bracing, and accessories, engineered to support size, weight, width, operation, and design of gate and roller assemblies.

TENSION WIRE AND FITTINGS

Metallic-Coated Steel Tension Wire: 0.177-inch- diameter, marcelled tension wire complying with ASTM A 824 at locations indicated.

Fittings: Provide fittings for a complete fence installation, including special fittings for corners. Comply with ASTM F 626.

END OF SECTION 02821

DIVISION 3 – CAST-IN-PLACE CONCRETE

STATE OF TEXAS
VICTOR M. DeANDA JR.
92641
LICENSED
PROFESSIONAL ENGINEER
Exp. 09/30/12
02/29/12

SECTION 03300 - CAST-IN-PLACE CONCRETE

PART 1 - GENERAL

1.1 RELATED DOCUMENTS

A. Drawings and general provisions of the Contract, including General and Supplementary Conditions and Division 1 Specification Sections, apply to this Section.

1.2 SUMMARY

A. This Section specifies cast-in place concrete, including formwork, reinforcing, mix design, placement procedures, and finishes.

B. Cast-in-place concrete includes the following:

1. Foundations and footings.
2. Slabs-on-grade.
3. Equipment pads and bases.

C. Related Sections: The following Sections contain requirements that relate to this Section:

1. Division 2 Section "Portland Cement Concrete Paving" for concrete paving and walks.

1.3 SUBMITTALS

A. General: Submit the following according to Conditions of the Contract and Division 1 Specification Sections.

B. Product data for proprietary materials and items, including reinforcement and forming accessories, admixtures, patching compounds, waterstops, joint systems, curing compounds, dry-shake finish materials, and others if requested by Engineer.

C. Shop drawings for reinforcement detailing fabricating, bending, and placing concrete reinforcement. Comply with ACI SP-66 (88), □ACI Detailing manual," showing bar schedules, stirrup spacing, bent bar diagrams, and arrangement of concrete reinforcement. Include special reinforcing required for openings through concrete structures.

D. Shop drawings for formwork indicating fabrication and erection of forms for specific finished concrete surfaces. Show form construction including jointing, special form joints or reveals, location and pattern of form tie placement, and other items that affect exposed concrete visually.

1. Engineer's review is for general architectural applications and features only. Designing formwork for structural stability and efficiency is Contractor's responsibility.

E. Samples of materials as requested by Engineer, including names, sources, and descriptions, as follows:

1. Color finishes.
2. Normal weight aggregates.
3. Reglets.
4. Waterstops.

5. Vapor retarder/barrier.

F. Laboratory test reports for concrete materials and mix design test.

G. Material certificates in lieu of material laboratory test reports when permitted by Engineer. Material certificates shall be signed by manufacturer and Contractor, certifying that each material item complies with or exceeds specified requirements. Provide certification from admixture manufacturers that chloride content complies with specification requirements.

1.4 QUALITY ASSURANCE

A. Codes and Standards: Comply with provisions of the following codes, specifications, and standards, except where more stringent requirements are shown or specified:

1. American Concrete Institute (ACI) 301, "Specifications for Structural Concrete for Buildings."
2. ACI 318, "Building Code Requirements for Reinforced Concrete."
3. Concrete Reinforcing Steel Institute (CRSI) "Manual of Standard Practice."

B. Concrete Testing Service: Owner to engage an independent testing laboratory acceptable to Engineer to perform material evaluation tests and to design concrete mixes.

C. Materials and installed work may require testing and retesting at any time during progress of Work. Tests, including retesting of rejected materials for installed Work, shall be done at Contractor's expense.

D. Mockup: Cast mockup of size indicated or as required to demonstrate typical joints, form tie spacing, and proposed surface finish, texture, and color. Maintain sample panel exposed to view for duration of Project, after Architect's acceptance of visual qualities.

1. Demolish mockup and remove from site when directed by Architect.

E. Preinstallation Conference: Conduct conference at Project site to comply with requirements of Division 1 Section "Project Meetings" and the following:

1. At least 15 days prior to submitting design mixes, conduct a meeting to review detailed requirements for preparing concrete design mixes and to determine procedures for satisfactory concrete operations. Review requirements for submittals, status of coordinating work, and availability of materials. Establish preliminary work progress schedule and procedures for materials inspection, testing, and certifications. Require representatives of each entity directly concerned with cast-in-place concrete to attend conference, including, but not limited to, the following:

a. Contractor's superintendent.
b. Agency responsible for concrete design mixes.
c. Agency responsible for field quality control.
d. Ready-mix concrete producer.
e. Concrete subcontractor.
f. Primary admixture manufacturers.

PART 2 - PRODUCTS

2.1 FORM MATERIALS

A. Forms for Exposed Finish Concrete: Plywood, metal, metal-framed plywood faced, or other acceptable panel-type materials to provide continuous, straight, smooth, exposed surfaces. Furnish in largest practicable sizes to minimize number of joints and to conform to joint system shown on drawings.

1. Use overlaid plywood complying with U.S. Product Standard PS-1 "A-C or B-B High Density Overlaid Concrete Form," Class I.
2. Use plywood complying with U.S. Product Standard PS-1 "B-B (Concrete Form) Plywood," Class I, Exterior Grade or better, mill-oiled and edge-sealed, with each piece bearing legible inspection trademark.
3. No form tie cone holes. Patching of form tie holes will not be allowed.

B. Forms for Unexposed Finish Concrete: Plywood, lumber, metal, or another acceptable material. Provide lumber dressed on at least two edges and one side for tight fit.

C. Form Release Agent: Provide commercial formulation form release agent with a maximum of 350 mg/l volatile organic compounds (VOCs) that will not bond with, stain, or adversely affect concrete surfaces and will not impair subsequent treatments of concrete surfaces.

D. Form Ties: Factory-fabricated, adjustable-length, removable or snap-off metal form ties designed to prevent form deflection and to prevent spalling of concrete upon removal. Provide units that will leave no metal closer than 1-1/2 inches to the plane of the exposed concrete surface.

1. Provide ties that, when removed, will leave holes not larger than 1 inch in diameter in the concrete surface.

2.2 REINFORCING MATERIALS

A. Reinforcing Bars: ASTM A 615, Grade 40 for No. 3 bars, Grade 60 for No. 4 bars and larger, deformed.

B. Steel Wire: ASTM A 82, plain, cold-drawn steel.

C. Welded Wire Fabric: ASTM A 185, welded steel wire fabric.

D. Deformed-Steel Welded Wire Fabric: ASTM A 497.

E. Supports for Reinforcement: Bolsters, chairs, ACI approved precast concrete block supports, spacers, and other devices for spacing, supporting, and fastening reinforcing bars and welded wire fabric in place. Use wire bar-type supports complying with CRSI specifications.

1. For slabs-on-grade, use supports with sand plates or horizontal runners where base material will not support chair legs.
2. For exposed-to-view concrete surfaces where legs of supports are in contact with forms, provide supports with legs that are protected by plastic (CRSI, Class 1) or stainless steel (CRSI, Class 2).

2.3 CONCRETE MATERIALS

A. Portland Cement: ASTM C 150, Type I.

1. Use one brand of cement throughout Project unless otherwise acceptable to Engineer of

Record.

B. Normal-Weight Aggregates: ASTM C 33 and as specified. Provide aggregates from a single source for exposed concrete.

1. For exposed exterior surfaces, do not use fine or coarse aggregates that contain substances that cause spalling.
2. Local aggregates not complying with ASTM C 33 that have been shown to produce concrete of adequate strength and durability by special tests or actual service may be used when acceptable to Engineer.

C. Lightweight Aggregates: ASTM C 330.
1. Nominal maximum aggregate size: 1/. inch.

D. Water: Potable.

E. Admixtures, General: Provide concrete admixtures that contain not more than 0.1 percent chloride ions.

F. Air-Entraining Admixture: ASTM C 260, certified by manufacturer to be compatible with other required admixtures.

1. Available Products: Subject to compliance with requirements, products that may be incorporated in the Work include, but are not limited to, the following:
2. Products: Subject to compliance with requirements, provide one of the following:

a. Air-Tite, Cormix Construction Chemicals.
b. Air-Mix or Perma-Air, Euclid Chemical Co.
c. Darex AEA or Daravair, W.R. Grace & Co.
d. MB-VR or Micro-Air, Master Builders, Inc.
e. Sealtight AEA, W.R. Meadows, Inc.
f. Sika AER, Sika Corp.

G. Water-Reducing Admixture: ASTM C 494, Type A.

1. Available Products: Subject to compliance with requirements, products that may be incorporated in the Work include, but are not limited to, the following:
2. Products: Subject to compliance with requirements, provide one of the following:

a. Chemtard, ChemMasters Corp.
b. PSI N, Cormix Construction Chemicals.
c. Eucon WR-75, Euclid Chemical Co.
d. WRDA, W.R. Grace & Co.
e. Pozzolith Normal or Polyheed, Master Builders, Inc.
f. Metco W.R., Metalcrete Industries.
g. Prokrete-N, Prokrete Industries.
h. Plastocrete 161, Sika Corp.

H. High-Range Water-Reducing Admixture: ASTM C 494, Type F or Type G.

1. Available Products: Subject to compliance with requirements, products that may be incorporated in the Work include, but are not limited to, the following:
2. Products: Subject to compliance with requirements, provide one of the following:

a. Super P, Anti-Hydro Co., Inc.
b. Cormix 200, Cormix Construction Chemicals.
c. Eucon 37, Euclid Chemical Co.

d. WRDA 19 or Daracem, W.R. Grace & Co.
e. Rheobuild or Polyheed, Master Builders, Inc.
f. Superslump, Metalcrete Industries.
g. PSPL, Prokrete Industries.
h. Sikament 300, Sika Corp.

I. Water-Reducing, Accelerating Admixture: ASTM C 494, Type E.
1. Available Products: Subject to compliance with requirements, products that may be incorporated in the Work include, but are not limited to, the following:
2. Products: Subject to compliance with requirements, provide one of the following:

a. Q-Set, Conspec Marketing & Manufacturing Co.
b. Lubricon NCA, Cormix Construction Chemicals.
c. Accelguard 80, Euclid Chemical Co.
d. Daraset, W.R. Grace & Co.
e. Pozzutec 20, Master Builders, Inc.
f. Accel-Set, Metalcrete Industries.

J. Water-Reducing, Retarding Admixture: ASTM C 494, Type D.

1. Available Products: Subject to compliance with requirements, products that may be incorporated in the Work include, but are not limited to, the following:
2. Products: Subject to compliance with requirements, provide one of the following:

a. PSI-R Plus, Cormix Construction Chemicals.
b. Eucon Retarder 75, Euclid Chemical Co.
c. Daratard-17, W.R. Grace & Co.
d. Pozzolith R, Master Builders, Inc.
e. Protard, Prokrete Industries.
f. Plastiment, Sika Corporation.

2.4 RELATED MATERIALS

A. Reglets: Where sheet flashing or bituminous membranes are terminated in reglets, provide reglets of not less than 0.0217-inch-thick (26-gage) galvanized sheet steel. Fill reglet or cover face opening to prevent intrusion of concrete or debris.

B. Dovetail Anchor Slots: Hot-dip galvanized sheet steel, not less than 0.0336 inch thick (22 gage) with bent tab anchors. Fill slot with temporary filler or cover face opening to prevent intrusion of concrete or debris.

C. Waterstops: Provide flat, dumbbell-type or centerbulb-type waterstops at construction joints and other joints as indicated. Size to suit joints.

D. Rubber Waterstops: Corps of Engineers CRD-C 513.

1. Available Manufacturers: Subject to compliance with requirements, manufacturers offering products that may be incorporated in the Work include, but are not limited to, the following:
2. Manufacturers: Subject to compliance with requirements, provide products of one of the following:

a. The Burke Co.
b. Progress Unlimited.
c. Williams Products, Inc.

E. Polyvinyl Chloride Waterstops: Corps of Engineers CRD-C 572.

1. Available Manufacturers: Subject to compliance with requirements, manufacturers offering products that may be incorporated in the Work include, but are not limited to, the following:
2. Manufacturers: Subject to compliance with requirements, provide products of one of the following:

   a. The Burke Co.
   b. Greenstreak Plastic Products Co.
   c. W.R. Meadows, Inc.
   d. Progress Unlimited.
   e. Schlegel Corp.
   f. Vinylex Corp.

F. Sand Cushion: Clean, manufactured or natural sand.

G. Vapor Retarder: Provide vapor retarder that is resistant to deterioration when tested according to ASTM E 154, as follows:

1. Polyethylene sheet not less than 10 mils thick lapped 12" min and sealed at all joints.

H. Nonslip Aggregate Finish: Provide fused aluminum oxide granules or crushed emery as the abrasive aggregate for a nonslip finish, with emery aggregate containing not less than 50 percent aluminum oxide and not less than 25 percent ferric oxide. Use material that is factory-graded, packaged, rustproof, nonglazing, and unaffected by freezing, moisture, and cleaning materials.

I. Absorptive Cover: Burlap cloth made from jute or kenaf, weighing approximately 9 oz. per sq. yd., complying with AASHTO M 182, Class 2.

J. Moisture-Retaining Cover: One of the following, complying with ASTM C 171.

1. Waterproof paper.
2. Polyethylene film.
3. Polyethylene-coated burlap.

K. Liquid Membrane-Forming Curing Compound: Liquid-type membrane-forming curing compound complying with ASTM C 309, Type I, Class A. Moisture loss not more than 0.55 kg/sq. meter when applied at 200 sq. ft./gal.

1. Provide material that has a maximum volatile organic compound (VOC) rating of 350 mg per liter.
2. Available Products: Subject to compliance with requirements, products that may be incorporated in the Work include, but are not limited to, the following:
3. Products: Subject to compliance with requirements, provide one of the following:

   a. A-H 3 Way Sealer, Anti-Hydro Co., Inc.
   b. Spartan-Cote, The Burke Co.
   c. Conspec #1, Conspec Marketing & Mfg. Co.
   d. Sealco 309, Cormix Construction Chemicals.
   e. Day-Chem Cure and Seal, Dayton Superior Corp.
   f. Eucocure, Euclid Chemical Co.
   g. Horn Clear Seal, A.C. Horn, Inc.
   h. L&M Cure R, L&M Construction Chemicals, Inc.
   i. Masterkure, Master Builders, Inc.
   j. CS-309, W.R. Meadows, Inc.
   k. Seal N Kure, Metalcrete Industries.

l. Kure-N-Seal, Sonneborn-Chemrex.
m. Stontop CS2, Stonhard, Inc.

L. Water-Based Acrylic Membrane Curing Compound: ASTM C 309, Type I, Class B.

1. Available Products: Subject to compliance with requirements, products that may be incorporated in the Work include, but are not limited to, the following:
2. Products: Subject to compliance with requirements, provide one of the following:

a. Highseal, Conspec Marketing and Mfg. Co.
b. Sealco - VOC, Cormix Construction Chemicals.
c. Safe Cure and Seal, Dayton Superior Corp.
d. Aqua-Cure, Euclid Chemical Co.
e. Dress & Seal WB, L&M Construction Chemicals, Inc.
f. Masterkure 100W, Master Builders, Inc.
g. Vocomp-20, W.R. Meadows, Inc.
h. Metcure, Metalcrete Industries.
i. Stontop CS1, Stonhard, Inc.

M. Evaporation Control: Monomolecular film-forming compound applied to exposed concrete slab surfaces for temporary protection from rapid moisture loss.

1. Available Products: Subject to compliance with requirements, products that may be incorporated in the Work include, but are not limited to, the following:
2. Products: Subject to compliance with requirements, provide one of the following:

a. Aquafilm, Conspec Marketing and Mfg. Co.
b. Eucobar, Euclid Chemical Co.
c. E-Con, L&M Construction Chemicals, Inc.
d. Confilm, Master Builders, Inc.
e. Waterhold, Metalcrete Industries.

N. Bonding Agent: Polyvinyl acetate or acrylic base.

1. Available Products: Subject to compliance with requirements, products that may be incorporated in the Work include, but are not limited to, the following:
2. Products: Subject to compliance with requirements, provide one of the following:

a. Polyvinyl Acetate (Interior Only):

1 Superior Concrete Bonder, Dayton Superior Corp.
2 Euco Weld, Euclid Chemical Co.
3 Weld-Crete, Larsen Products Corp.
4 Everweld, L&M Construction Chemicals, Inc.
5 Herculox, Metalcrete Industries.
6 Ready Bond, Symons Corp.

b. Acrylic or Styrene Butadiene:

1. Acrylic Bondcrete, The Burke Co.
2. Strongbond, Conspec Marketing and Mfg. Co.
3. Day-Chem Ad Bond, Dayton Superior Corp.
4. SBR Latex, Euclid Chemical Co.
5. Daraweld C, W.R. Grace & Co.
6. Hornweld, A.C. Horn, Inc.

7. Everbond, L&M Construction Chemicals, Inc.
8. Acryl-Set, Master Builders Inc.
9. Intralok, W.R. Meadows, Inc.
10. Acrylpave, Metalcrete Industries.
11. Sonocrete, Sonneborn-Chemrex.
12. Stonlock LB2, Stonhard, Inc.
13. Strong Bond, Symons Corp.

O. Epoxy Adhesive: ASTM C 881, two-component material suitable for use on dry or damp surfaces. Provide material type, grade, and class to suit Project requirements.

1. Available Products: Subject to compliance with requirements, products that may be incorporated in the Work include, but are not limited to, the following:
2. Products: Subject to compliance with requirements, provide one of the following:

a. Burke Epoxy M.V., The Burke Co.
b. Spec-Bond 100, Conspec Marketing and Mfg. Co.
c. Resi-Bond (J-58), Dayton Superior.
d. Euco Epoxy System #452 or #620, Euclid Chemical Co.
e. Epoxtite Binder 2390, A.C. Horn, Inc.
f. Epabond, L&M Construction Chemicals, Inc.
g. Concresive Standard Liquid, Master Builders, Inc.
h. Rezi-Weld 1000, W.R. Meadows, Inc.
i. Metco Hi-Mod Epoxy, Metalcrete Industries.
j. Sikadur 32 Hi-Mod, Sika Corp.
k. Stonset LV5, Stonhard, Inc.
l. R-600 Series, Symons Corp.

2.5 PROPORTIONING AND DESIGNING MIXES

A. Prepare design mixes for each type and strength of concrete by either laboratory trial batch or field experience methods as specified in ACI 301. For the trial batch method, use an independent testing agency acceptable to Engineer for preparing and reporting proposed mix designs.

1. **Do not use the same testing agency for field quality control testing.**
2. **Use of fly ash or calcium chloride** will not be permitted in concrete, unless noted otherwise.

B. Submit written reports to Architect of each proposed mix for each class of concrete at least 15 days prior to start of Work. Do not begin concrete production until proposed mix designs have been reviewed by Engineer.

C. Design mixes to provide normal weight concrete with the following properties as indicated on drawings and schedules:

1. 3000-psi, 28-day compressive strength; water-cement ratio, 0.58 maximum (non-air-entrained), 0.46 maximum (air-entrained). For slabs on grade, grade beam, loading docks & ramps.
2. 2500-psi, 28-day compressive strength; water-cement ratio, 0.67 maximum (non-air-entrained), 0.54 maximum (air-entrained). For miscellaneous sidewalks and curbs not otherwise called out to have a higher strength.

D. Water-Cement Ratio: Provide concrete for following conditions with maximum water-cement (W/C) ratios as follows:

1. Subjected to freezing and thawing: W/C 0.45.

E. Slump Limits: Proportion and design mixes to result in concrete slump at point of placement as follows:

1. Ramps, slabs, and sloping surfaces: Not more than 3 inches.
2. Reinforced foundation systems: Not less than 1 inch and not more than 5 inches.
3. Concrete containing high-range water-reducing admixture (superplasticizer): Not more than 8 inches after adding admixture to site-verified 2-to-3-inch slump concrete.
4. Other concrete: Not more than 4 inches.

F. Adjustment to Concrete Mixes: Mix design adjustments may be requested by Contractor when characteristics of materials, job conditions, weather, test results, or other circumstances warrant, as accepted by Engineer. Laboratory test data for revised mix design and strength results must be submitted to and accepted by Architect before using in Work.

2.6 ADMIXTURES

A. Use water-reducing admixture or high-range water-reducing admixture (superplasticizer) in concrete, as required, for placement and workability.

B. Use accelerating admixture in concrete slabs placed at ambient temperatures below 50 deg F (10 deg C).

C. Use high-range water-reducing admixture in pumped concrete, concrete for heavy-use industrial slabs, architectural concrete, parking structure slabs, concrete required to be watertight, and concrete with water-cement ratios below 0.50.

D. Use admixtures for water reduction and set accelerating or retarding in strict compliance with manufacturer's directions.

2.7 CONCRETE MIXING

A. Job-Site Mixing: Mix concrete materials in appropriate drum-type batch machine mixer. For mixers of 1 cu. yd. or smaller capacity, continue mixing at least 1-1/2 minutes, but not more than 5 minutes after ingredients are in mixer, before any part of batch is released. For mixers of capacity larger than 1 cu. yd., increase minimum 1-1/2 minutes of mixing time by 15 seconds for each additional cu. yd.

1. Provide batch ticket for each batch discharged and used in the Work, indicating Project identification name and number, date, mix type, mix time, quantity, and amount of water introduced.

B. Ready-Mixed Concrete: Comply with requirements of ASTM C 94, and as specified.

1. When air temperature is between 85 deg F (30 deg C) and 90 deg F (32 deg C), reduce mixing and delivery time from 1-1/2 hours to 75 minutes, and when air temperature is above 90 deg F (32 deg C), reduce mixing and delivery time to 60 minutes.

PART 3 - EXECUTION

3.1 GENERAL

A. Coordinate the installation of joint materials, vapor retarder/barrier, and other related materials with placement of forms and reinforcing steel.

3.2 FORMS

A. General: Design, erect, support, brace, and maintain formwork to support vertical, lateral, static, and dynamic loads that might be applied until concrete structure can support such loads. Construct formwork so concrete members and structures are of correct size, shape, alignment, elevation, and position. Maintain formwork construction tolerances and surface irregularities complying with the following ACI 347 limits:

1. Provide Class A tolerances for concrete surfaces exposed to view.
2. Provide Class C tolerances for other concrete surfaces.

B. Construct forms to sizes, shapes, lines, and dimensions shown and to obtain accurate alignment, location, grades, level, and plumb work in finished structures. Provide for openings, offsets, sinkages, keyways, recesses, moldings, rustications, reglets, chamfers, blocking, screeds, bulkheads, anchorages and inserts, and other features required in the Work. Use selected materials to obtain required finishes. Solidly butt joints and provide backup at joints to prevent cement paste from leaking.

C. Fabricate forms for easy removal without hammering or prying against concrete surfaces. Provide crush plates or wrecking plates where stripping may damage cast concrete surfaces. Provide top forms for inclined surfaces where slope is too steep to place concrete with bottom forms only. Kerf wood inserts for forming keyways, reglets, recesses, and the like for easy removal.

D. Provide temporary openings for clean-outs and inspections where interior area of formwork is inaccessible before and during concrete placement. Securely brace temporary openings and set tightly to forms to prevent losing concrete mortar. Locate temporary openings in forms at inconspicuous locations.

E. Chamfer exposed corners and edges as indicated, using wood, metal, PVC, or rubber chamfer strips fabricated to produce uniform smooth lines and tight edge joints.

F. Provisions for Other Trades: Provide openings in concrete formwork to accommodate work of other trades. Determine size and location of openings, recesses, and chases from trades providing such items. Accurately place and securely support items built into forms.

G. Cleaning and Tightening: Thoroughly clean forms and adjacent surfaces to receive concrete. Remove chips, wood, sawdust, dirt, or other debris just before placing concrete. Retighten forms and bracing before placing concrete, as required, to prevent mortar leaks and maintain proper alignment.

3.3 VAPOR RETARDER/BARRIER INSTALLATION

A. General: Place vapor retarder/barrier sheeting in position with longest dimension parallel with direction of pour.

B. Lap joints 12 inches and seal with manufacturer's recommended mastic or pressure-sensitive tape.

3.4 PLACING REINFORCEMENT

A. General: Comply with Concrete Reinforcing Steel Institute's recommended practice for "Placing Reinforcing Bars," for details and methods of reinforcement placement and supports and as specified.

1. Avoiding cutting or puncturing vapor retarder/barrier during reinforcement placement and concreting operations. Repair damages before placing concrete.

B. Clean reinforcement of loose rust and mill scale, earth, ice, and other materials that reduce or destroy bond with concrete.

C. Accurately position, support, and secure reinforcement against displacement. Locate and support reinforcing by metal chairs, runners, bolsters, spacers, and hangers, as approved by Engineer.

D. Place reinforcement to maintain minimum coverages as indicated for concrete protection. Arrange, space, and securely tie bars and bar supports to hold reinforcement in position during concrete placement operations. Set wire ties so ends are directed into concrete, not toward exposed concrete surfaces.

E. Install welded wire fabric in lengths as long as practicable. Lap adjoining pieces at least one full mesh and lace splices with wire. Offset laps of adjoining widths to prevent continuous laps in either direction.

3.5 JOINTS

A. Construction Joints: Locate and install construction joints so they do not impair strength or appearance of the structure, as acceptable to Architect.

B. Provide keyways at least 1-1/2 inches deep in construction joints in walls and slabs and between walls and footings. Bulkheads designed and accepted for this purpose may be used for slabs.

C. Place construction joints perpendicular to main reinforcement. Continue reinforcement across construction joints except as indicated otherwise. Do not continue reinforcement through sides of strip placements.

D. Use bonding agent on existing concrete surfaces that will be joined with fresh concrete.

E. Waterstops: Provide waterstops in construction joints as indicated. Install waterstops to form continuous diaphragm in each joint. Support and protect exposed waterstops during progress of Work. Field-fabricate joints in waterstops according to manufacturer's printed instructions.

F. Isolation Joints in Slabs-on-Grade: Construct isolation joints in slabs-on-grade at points of contact between slabs-on-grade and vertical surfaces, such as column pedestals, foundation walls, grade beams, and other locations, as indicated.

1. Joint fillers and sealants are specified in Division 7 Section "Joint Sealants."

G. Contraction (Control) Joints in Slabs-on-Grade: Construct contraction joints in slabs-on-grade to form panels of patterns as shown. Use saw cuts 1/8 inch wide by one-fourth of slab depth or inserts 1/4 inch wide by one-fourth of slab depth, unless otherwise indicated.

1. Form contraction joints by inserting premolded plastic, hardboard, or fiberboard strip into fresh concrete until top surface of strip is flush with slab surface. Tool slab edges round on each side of insert. After concrete has cured, remove inserts and clean groove of loose debris.
2. Contraction joints in unexposed floor slabs may be formed by saw cuts as soon as possible

after slab finishing as may be safely done without dislodging aggregate.

3. If joint pattern is not shown, provide joints not exceeding 15 feet in either direction and located to conform to bay spacing wherever possible (at column centerlines, half bays, third bays).
4. Joint fillers and sealants are specified in Division 7 Section "Joint Sealants."

3.6 INSTALLING EMBEDDED ITEMS

A. General: Set and build into formwork anchorage devices and other embedded items required for other work that is attached to or supported by cast-in-place concrete. Use setting drawings, diagrams, instructions, and directions provided by suppliers of items to be attached.

B. Install reglets to receive top edge of foundation sheet waterproofing and to receive through-wall flashings in outer face of concrete frame at exterior walls, where flashing is shown at lintels, relieving angles, and other conditions.

C. Install dovetail anchor slots in concrete structures as indicated on drawings.

D. Forms for Slabs: Set edge forms, bulkheads, and intermediate screed strips for slabs to achieve required elevations and contours in finished surfaces. Provide and secure units to support screed strips using strike-off templates or compacting-type screeds.

3.7 PREPARING FORM SURFACES

A. General: Coat contact surfaces of forms with an approved, nonresidual, low-VOC, form-coating compound before placing reinforcement.

B. Do not allow excess form-coating material to accumulate in forms or come into contact with in-place concrete surfaces against which fresh concrete will be placed. Apply according to manufacturer's instructions.

1. Coat steel forms with a nonstaining, rust-preventative material. Rust-stained steel formwork is not acceptable.

3.8 CONCRETE PLACEMENT

A. Inspection: Before placing concrete, inspect and complete formwork installation, reinforcing steel, and items to be embedded or cast in. Notify other trades to permit installation of their work.

B. General: Comply with ACI 304, "Guide for Measuring, Mixing, Transporting, and Placing Concrete," and as specified.

C. Deposit concrete continuously or in layers of such thickness that no new concrete will be placed on concrete that has hardened sufficiently to cause seams or planes of weakness. If a section cannot be placed continuously, provide construction joints as specified. Deposit concrete to avoid segregation at its final location.

D. Placing Concrete in Forms: Deposit concrete in forms in horizontal layers no deeper than 24 inches and in a manner to avoid inclined construction joints. Where placement consists of several layers, place each layer while preceding layer is still plastic to avoid cold joints.

1. Consolidate placed concrete by mechanical vibrating equipment supplemented by hand-spading, rodding, or tamping. Use equipment and procedures for consolidation of concrete complying with ACI 309.
2. Do not use vibrators to transport concrete inside forms. Insert and withdraw vibrators

vertically at uniformly spaced locations no farther than the visible effectiveness of the machine. Place vibrators to rapidly penetrate placed layer and at least 6 inches into preceding layer. Do not insert vibrators into lower layers of concrete that have begun to set. At each insertion, limit duration of vibration to time necessary to consolidate concrete and complete embedment of reinforcement and other embedded items without causing mix to segregate.

E. Placing Concrete Slabs: Deposit and consolidate concrete slabs in a continuous operation, within limits of construction joints, until completing placement of a panel or section.

1. Consolidate concrete during placement operations so that concrete is thoroughly worked around reinforcement, other embedded items and into corners.
2. Bring slab surfaces to correct level with a straightedge and strike off. Use bull floats or darbies to smooth surface free of humps or hollows. Do not disturb slab surfaces prior to beginning finishing operations.
3. Maintain reinforcing in proper position on chairs during concrete placement.

F. Cold-Weather Placement: Comply with provisions of ACI 306 and as follows. Protect concrete work from physical damage or reduced strength that could be caused by frost, freezing actions, or low temperatures.

G. When air temperature has fallen to or is expected to fall below 40 deg F (4 deg C), uniformly heat water and aggregates before mixing to obtain a concrete mixture temperature of not less than 50 deg F (10 deg C) and not more than 80 deg F (27 deg C) at point of placement.

1. Do not use frozen materials or materials containing ice or snow. Do not place concrete on frozen subgrade or on subgrade containing frozen materials.
2. Do not use calcium chloride, salt, or other materials containing antifreeze agents or chemical accelerators unless otherwise accepted in mix designs.

H. Hot-Weather Placement: When hot weather conditions exist that would impair quality and strength of concrete, place concrete complying with ACI 305 and as specified.

1. Cool ingredients before mixing to maintain concrete temperature at time of placement to below 90 deg F (32 deg C). Mixing water may be chilled or chopped ice may be used to control temperature, provided water equivalent of ice is calculated to total amount of mixing water. Using liquid nitrogen to cool concrete is Contractor's option.
2. Cover reinforcing steel with water-soaked burlap if it becomes too hot, so that steel temperature will not exceed the ambient air temperature immediately before embedding in concrete.
3. Fog spray forms, reinforcing steel, and subgrade just before placing concrete. Keep subgrade moisture uniform without puddles or dry areas.
4. Use water-reducing retarding admixture when required by high temperatures, low humidity, or other adverse placing conditions, as acceptable to Architect.

3.9 FINISHING FORMED SURFACES

A. Rough-Formed Finish: Provide a rough-formed finish on formed concrete surfaces not exposed to view in the finished Work or concealed by other construction. This is the concrete surface having texture imparted by form-facing material used, with tie holes and defective areas repaired and patched, and fins and other projections exceeding 3/4 inch in height rubbed down or chipped off.

B. Smooth-Formed Finish: Provide a smooth-formed finish on formed concrete surfaces exposed to view or to be covered with a coating material applied directly to concrete, or a covering material applied directly to concrete, such as waterproofing, dampproofing, veneer plaster, painting, or another similar system. This is an as-cast concrete surface obtained with selected form-facing

material, arranged in an orderly and symmetrical manner with a minimum of seams. Repair and patch defective areas with fins and other projections completely removed and smoothed.

C. Smooth-Rubbed Finish: Provide smooth-rubbed finish on scheduled concrete surfaces that have received smooth-formed finish treatment not later than 1 day after form removal.

1. Moisten concrete surfaces and rub with carborundum brick or another abrasive until producing a uniform color and texture. Do not apply cement grout other than that created by the rubbing process.

D. Grout-Cleaned Finish: Provide grout-cleaned finish on scheduled concrete surfaces that have received smooth-formed finish treatment.

1. Combine one part portland cement to one and one-half parts fine sand by volume, and a 50:50 mixture of acrylic or styrene butadiene-based bonding admixture and water to form the consistency of thick paint. Blend standard portland cement and white portland cement in amounts determined by trial patches so that final color of dry grout will match adjacent surfaces.
2. Thoroughly wet concrete surfaces, apply grout to coat surfaces, and fill small holes. Remove excess grout by scraping and rubbing with clean burlap. Keep damp by fog spray for at least 36 hours after rubbing.

E. Related Unformed Surfaces: At tops of walls, horizontal offsets, and similar unformed surfaces adjacent to formed surfaces, strike-off smooth and finish with a texture matching adjacent formed surfaces. Continue final surface treatment of formed surfaces uniformly across adjacent unformed surfaces unless otherwise indicated.

3.10 MONOLITHIC SLAB FINISHES

A. Scratch Finish: Apply scratch finish to monolithic slab surfaces to receive concrete floor topping or mortar setting beds for tile, portland cement terrazzo, and other bonded applied cementitious finish flooring material, and where indicated.

1. After placing slabs, finish surface to tolerances of F(F) 25 (floor flatness) and F(L) 20 (floor levelness) measured according to ASTM E 1155. Slope surfaces uniformly to drains where required. After leveling, roughen surface before final set with stiff brushes, brooms, or rakes.

B. Float Finish: Apply float finish to monolithic slab surfaces to receive trowel finish and other finishes as specified; slab surfaces to be covered with membrane or elastic waterproofing, membrane or elastic roofing, or sand-bed terrazzo; and where indicated.

1. After screeding, consolidating, and leveling concrete slabs, do not work surface until ready for floating. Begin floating, using float blades or float shoes only, when surface water has disappeared, or when concrete has stiffened sufficiently to permit operation of power-driven floats, or both. Consolidate surface with power-driven floats or by hand-floating if area is small or inaccessible to power units. Finish surfaces to tolerances of F(F) 25 (floor flatness) and F(L) 20 (floor levelness) measured according to ASTM E 1155. Cut down high spots and fill low spots. Uniformly slope surfaces to drains. Immediately after leveling, refloat surface to a uniform, smooth, granular texture.

C. Trowel Finish: Apply a trowel finish to monolithic slab surfaces exposed to view and slab surfaces to be covered with resilient flooring, carpet, ceramic or quarry tile, paint, or another thin film-finish coating system.

1. After floating, begin first trowel-finish operation using a power-driven trowel. Begin final

troweling when surface produces a ringing sound as trowel is moved over surface. Consolidate concrete surface by final hand-troweling operation, free of trowel marks, uniform in texture and appearance, and finish surfaces to tolerances of F(F) 25 (floor flatness) and F(L) 20 (floor levelness) measured according to ASTM E 1155. Grind smooth any surface defects that would telegraph through applied floor covering system.

D. Trowel and Fine Broom Finish: Where ceramic or quarry tile is to be installed with thin-set mortar, apply a trowel finish as specified, then immediately follow by slightly scarifying the surface with a fine broom.

E. Nonslip Broom Finish: Apply a nonslip broom finish to exterior concrete platforms, steps, and ramps, and elsewhere as indicated.

1. Immediately after float finishing, slightly roughen concrete surface by brooming with fiber-bristle broom perpendicular to main traffic route. Coordinate required final finish with Architect before application.

F. Nonslip Aggregate Finish: Apply nonslip aggregate finish to concrete stair treads, platforms, ramps, sloped walks, and where indicated.

1. After completing float finishing and before starting trowel finish, uniformly spread 25 lb of dampened nonslip aggregate per 100 sq. ft. of surface. Tamp aggregate flush with surface using a steel trowel, but do not force below surface. After broadcasting and tamping, apply trowel finishing as specified.
2. After curing, lightly work surface with a steel wire brush or an abrasive stone, and water to expose nonslip aggregate.

3.11 MISCELLANEOUS CONCRETE ITEMS

A. Filling In: Fill in holes and openings left in concrete structures for passage of work by other trades, unless otherwise shown or directed, after work of other trades is in place. Mix, place, and cure concrete as specified to blend with in-place construction. Provide other miscellaneous concrete filling shown or required to complete Work.

B. Curbs: Provide monolithic finish to interior curbs by stripping forms while concrete is still green and by steel-troweling surfaces to a hard, dense finish with corners, intersections, and terminations slightly rounded.

C. Equipment Bases and Foundations: Provide machine and equipment bases and foundations as shown on drawings. Set anchor bolts for machines and equipment to template at correct elevations, complying with diagrams or templates of manufacturer furnishing machines and equipment.

3.12 CONCRETE CURING AND PROTECTION

A. General: Protect freshly placed concrete from premature drying and excessive cold or hot temperatures. In hot, dry, and windy weather protect concrete from rapid moisture loss before and during finishing operations with an evaporation-control material. Apply according to manufacturer's instructions after screeding and bull floating, but before power floating and troweling.

B. Start initial curing as soon as free water has disappeared from concrete surface after placing and finishing. Weather permitting, keep continuously moist for not less than 7 days.

C. Curing Methods: **Cure concrete by moisture-retaining cover curing, or by combining these**

methods, as specified.

D. Provide moisture curing by the following methods:

1. Keep concrete surface continuously wet by covering with water.
2. Use continuous water-fog spray.
3. Cover concrete surface with specified absorptive cover, thoroughly saturate cover with water, and keep continuously wet. Place absorptive cover to provide coverage of concrete surfaces and edges, with a 4-inch lap over adjacent absorptive covers.

E. Provide moisture-retaining cover curing as follows:

1. Cover concrete surfaces with moisture-retaining cover for curing concrete, placed in widest practicable width with sides and ends lapped at least 3 inches and sealed by waterproof tape or adhesive. Immediately repair any holes or tears during curing period using cover material and waterproof tape.

F. Curing Formed Surfaces: Cure formed concrete surfaces, including underside of beams, supported slabs, and other similar surfaces, by moist curing with forms in place for the full curing period or until forms are removed. If forms are removed, continue curing by methods specified above, as applicable.

G. Curing Unformed Surfaces: Cure unformed surfaces, including slabs, floor topping, and other flat surfaces, by applying the appropriate curing method.

1. Final cure concrete surfaces to receive finish flooring with a moisture-retaining cover, unless otherwise directed.

3.13 REMOVING FORMS

A. General: Formwork not supporting weight of concrete, such as sides of beams, walls, columns, and similar parts of the work, may be removed after cumulatively curing at not less than 50 deg F (10 deg C) for 24 hours after placing concrete, provided concrete is sufficiently hard to not be damaged by form-removal operations, and provided curing and protection operations are maintained.

B. Formwork supporting weight of concrete, such as beam soffits, joists, slabs, and other structural elements, may not be removed in less than 14 days or until concrete has attained at least 75 percent of design minimum compressive strength at 28 days. Determine potential compressive strength of in-place concrete by testing field-cured specimens representative of concrete location or members.

C. Form-facing material may be removed 4 days after placement only if shores and other vertical supports have been arranged to permit removal of form-facing material without loosening or disturbing shores and supports.

3.14 REUSING FORMS

A. Clean and repair surfaces of forms to be reused in the Work. Split, frayed, delaminated, or otherwise damaged form-facing material will not be acceptable for exposed surfaces. Apply new form-coating compound as specified for new formwork.

B. When forms are extended for successive concrete placement, thoroughly clean surfaces, remove fins and laitance, and tighten forms to close joints. Align and secure joint to avoid offsets. Do not use patched forms for exposed concrete surfaces except as acceptable to Architect.

3.15 CONCRETE SURFACE REPAIRS

A. Patching Defective Areas: Repair and patch defective areas with cement mortar immediately after removing forms, when acceptable to Architect.

B. Mix dry-pack mortar, consisting of one part portland cement to 2-1/2 parts fine aggregate passing a No. 16 mesh sieve, using only enough water as required for handling and placing.

1. Cut out honeycombs, rock pockets, voids over 3/4 inch in any dimension, and holes left by tie rods and bolts down to solid concrete but in no case to a depth less than 1 inch. Make edges of cuts perpendicular to the concrete surface. Thoroughly clean, dampen with water, and brush-coat the area to be patched with bonding agent. Place patching mortar before bonding agent has dried.
2. For surfaces exposed to view, blend white portland cement and standard portland cement so that, when dry, patching mortar will match surrounding color. Provide test areas at inconspicuous locations to verify mixture and color match before proceeding with patching. Compact mortar in place and strike-off slightly higher than surrounding surface.

C. Repairing Formed Surfaces: Remove and replace concrete having defective surfaces if defects cannot be repaired to satisfaction of Architect. Surface defects include color and texture irregularities, cracks, spalls, air bubbles, honeycomb, rock pockets, fins and other projections on the surface, and stains and other discolorations that cannot be removed by cleaning. Flush out form tie holes and fill with dry-pack mortar or precast cement cone plugs secured in place with bonding agent.

1. Repair concealed formed surfaces, where possible, containing defects that affect the concrete's durability. If defects cannot be repaired, remove and replace the concrete.

D. Repairing Unformed Surfaces: Test unformed surfaces, such as monolithic slabs, for smoothness and verify surface tolerances specified for each surface and finish. Correct low and high areas as specified. Test unformed surfaces sloped to drain for trueness of slope and smoothness by using a template having the required slope.

1. Repair finished unformed surfaces containing defects that affect the concrete's durability. Surface defects include crazing and cracks in excess of 0.01 inch wide or that penetrate to the reinforcement or completely through nonreinforced sections regardless of width, spalling, popouts, honeycombs, rock pockets, and other objectionable conditions.
2. Correct high areas in unformed surfaces by grinding after concrete has cured at least 14 days.
3. Correct low areas in unformed surfaces during or immediately after completing surface finishing operations by cutting out low areas and replacing with patching mortar. Finish repaired areas to blend into adjacent concrete. Proprietary underlayment compounds may be used when acceptable to Architect.
4. Repair defective areas, except random cracks and single holes not exceeding 1 inch in diameter, by cutting out and replacing with fresh concrete. Remove defective areas with clean, square cuts and expose reinforcing steel with at least 3/4-inch clearance all around. Dampen concrete surfaces in contact with patching concrete and apply bonding agent. Mix patching concrete of same materials to provide concrete of same type or class as original concrete. Place, compact, and finish to blend with adjacent finished concrete. Cure in same manner as adjacent concrete.

E. Repair isolated random cracks and single holes 1 inch or less in diameter by dry-pack method. Groove top of cracks and cut out holes to sound concrete and clean of dust, dirt, and loose particles. Dampen cleaned concrete surfaces and apply bonding compound. Place dry-pack before bonding agent has dried. Compact dry-pack mixture in place and finish to match adjacent

concrete. Keep patched area continuously moist for at least 72 hours.

F. Perform structural repairs with prior approval of Engineer for method and procedure, using specified epoxy adhesive and mortar.

G. Repair methods not specified above may be used, subject to acceptance of Engineer.

3.16 QUALITY CONTROL TESTING DURING CONSTRUCTION

A. General: The Owner will employ a testing agency to perform tests and to submit test reports.

B. Sampling and testing for quality control during concrete placement may include the following, as directed by Engineer.

1. Sampling Fresh Concrete: ASTM C 172, except modified for slump to comply with ASTM C 94.

   a. Slump: ASTM C 143; one test at point of discharge for each day's pour of each type of concrete; additional tests when concrete consistency seems to have changed.
   b. Air Content: ASTM C 173, volumetric method for lightweight or normal weight concrete; ASTM C 231, pressure method for normal weight concrete; one for each day's pour of each type of air-entrained concrete.
   c. Concrete Temperature: ASTM C 1064; one test hourly when air temperature is 40 deg F (4 deg C) and below, when 80 deg F (27 deg C) and above, and one test for each set of compressive-strength specimens.
   d. Compression Test Specimen: ASTM C 31; one set of four standard cylinders for each compressive-strength test, unless otherwise directed. Mold and store cylinders for laboratory-cured test specimens except when field-cured test specimens are required.
   e. Compressive-Strength Tests: ASTM C 39; one set for each day's pour exceeding 5 cu. yd. plus additional sets for each 50 cu. yd. more than the first 25 cu. yd. of each concrete class placed in any one day; one specimen tested at 7 days, two specimens tested at 28 days, and one specimen retained in reserve for later testing if required.
   f. For drilled piers, u.n.o., there shall be (1) set of compressive strength test for each 10 cu. Yds.

2. When frequency of testing will provide fewer than five strength tests for a given class of concrete, conduct testing from at least five randomly selected batches or from each batch if fewer than five are used.
3. When total quantity of a given class of concrete is less than 50 cu. yd., Engineer may waive strength testing if adequate evidence of satisfactory strength is provided.
4. When strength of field-cured cylinders is less than 85 percent of companion laboratory-cured cylinders, evaluate current operations and provide corrective procedures for protecting and curing the in-place concrete.
5. Strength level of concrete will be considered satisfactory if averages of sets of three consecutive strength test results equal or exceed specified compressive strength and no individual strength test result falls below specified compressive strength by more than 500 psi.

C. Test results will be reported in writing to Architect, Structural Engineer, ready-mix producer, and Contractor within 24 hours after tests. Reports of compressive strength tests shall contain the Project identification name and number, date of concrete placement, name of concrete testing service, concrete type and class, location of concrete batch in structure, design compressive strength at 28 days, concrete mix proportions and materials, compressive breaking strength, and type of break for both 7-day tests and 28-day tests.

D. Nondestructive Testing: Impact hammer, sonoscope, or other nondestructive device may be permitted but shall not be used as the sole basis for acceptance or rejection.

E. Additional Tests: The testing agency will make additional tests of in-place concrete when test results indicate specified concrete strengths and other characteristics have not been attained in the structure, as directed by Architect. Testing agency may conduct tests to determine adequacy of concrete by cored cylinders complying with ASTM C 42, or by other methods as directed.

END OF SECTION 03300

DIVISION 4 MASONRY

04200 UNIT MASONRY

Standards: Comply with recommendations of Brick Institute of America (BIA), and National Concrete Masonry Assoc. (NCMA).

Face Brick: ASTM C 2161 Grade SW, Type FBS, King Size, cored or uncored.

Concrete Block: Provide Grade N loadbearing units complying with the following requirements:

Type I

Exposed Faces: Manufacturer's standard color and texture, unless otherwise indicated.

Hollow Block: ASTM C 90

Weight Classification: Lightweight.

Portland Cement: ASTM C 150 Type I; natural or white except white where required for color match.

Masonry Cement: ASTM C 91.

Lime: Hydrated lime, ASTM C 207, Type S.

Sand for Mortar: ASTM C 144, or finer if needed for joint sizes less than 1/4".

Colored Mortar Pigments: Natural and synthetic iron oxides and chromium oxides, compounded for use in mortar mixes.

Water: Clean and Potable.

Masonry Veneer Anchors: 22 gage corrugated steel, 1" wide, 1.5 oz. hot-dip zinc coating or 7-mil copper coating, for wood.

Mortar for Unit Masonry: ASTM C 270, Proportion Specification for types of mortar required.

Limit cementitious materials to portland cement-lime.

Use Type M mortar for masonry below grade and in contact with earth, and where indicated.

Use Type S mortar for reinforced masonry and where indicated.

Use Type N mortar for exterior above-grade loadbearing and non-loadbearing walls; for interior loadbearing walls and for other applications where another type is not indicated.

Install (lay) masonry units in the bond pattern indicated, or if none is indicated, in running bond.

Cut exposed masonry units, where necessary, with a power saw. Avoid the use (by proper layout) of less-than-half-size units.

Wet brick of high absorption, prior to laying.

Bond intersecting walls with masonry units or provide anchors spaced 2'-0".

Hold uniform joint sizes as indicated, or if not indicated, hold joint sizes to suit modular size of masonry units.

Cut joints flush and tool slightly concave, unless otherwise indicated.

Keep cavities clean of mortar droppings, and install ties spaced 16" vertically and 24" horizontally. Provide weep holes spaced 24" apart at the bottom of (and at ledges in) cavities.

Anchor ends of walls to structure with anchors spaced 2'-0", except as otherwise shown.

Provide control and expansion .joints at locations shown, and keep clean of mortar droppings.

Provide concealed flashing in exterior masonry work as indicated.

Except as otherwise shown, provide flashing under copings and sills, through wall at counterflashing locations, and above elements of structural support for masonry.

Build other work into the masonry work as shown, fitting masonry units around other work, and grouting for secure anchorage.

Protect newly laid masonry from exposure to precipitation, excessive drying, freezing, soiling, backfill and other harmful elements.

Dry-Brush masonry work at end of each day's work.

Clean unglazed clay masonry with stiff brushes, and a solution of trisodium phosphate and detergent (1/2 cup of each in one gal. water).

If above cleaning is unsuccessful, as judged by the Architect, clean with acid, complying with BIA recommendations.

END OF SECTION 04200

DIVISION 5 METALS

05500 METAL FABRICATIONS

PART - 1 GENERAL

Submittals: In addition to product data, submit the following:

Shop Drawings showing details of fabrication, assembly and installation including templates for anchor bolt placement.
Samples of materials and finished products as may be requested by Architect.

Materials/Fabrications:

General: For work exposed to view use materials selected for their smoothness and freedom from surface blemishes.

Steel Plates, Shapes, Bars: ASTM A 36.

Steel Tubing: ASTM A 500 or ASTM A 501.

Galvanized Structural Steel Sheets: ASTM A 446, of grade required for design loading; coating designation G90 or as indicated.

Steel Pipe: ASTM A 53, type and grade as required for design loading (if applicable), black finish unless galvanizing indicated; standard weight (Schedule 40) unless otherwise indicated.

Concrete Inserts: Threaded or wedge type; galvanized ferrous castings, either galvanized ferrous castings, malleable iron, cast steel; with steel bolts, washers and shims; hot-dip galvanized.

Metallic Non-Shrink Grout: CE CRD-C588, Type M.

Non-Shrink Non-Metallic Grout: CE CRD-C621, non-staining, noncorrosive, non-gaseous; recommended by mfr. for types of applications indicated.

Fasteners: Provide bolts, nuts, lag bolts, machine screws, wood screws, toggle bolts, masonry anchorage devices, lock washers as required for application indicated and complying with applicable Federal standards. Hot-dip galvanize fasteners for exterior applications to comply with ASTM A 153.

Shop Painting: Apply shop primer to surface or metal fabrications except those embedded in concrete or galvanized; comply with SSPC-PA1 and requirements indicated below:

Surface Preparation: Comply with SSPC-SP6 " Commercial Blast Cleaning " for exteriorwork, and with SSPC-SP6" Power Tool Cleaning" for interior work.

Shop Primer: Fabricator's standard, fast-curing, lead-free, "universal" primer complying with performance requirements of FSTT-P-645.

Galvanizing: ASTM A 386 for assembled products; ASTM A 123 for rolled, pressed and forged steel shapes, plates, bars and strip 1/8" and thicker; galvanizing repair paint: MIL-P-21035 or SSPCPaint-20.

Fabrication, General: Use materials of size and thickness shown or, if not shown, of required size, grade and thickness to produce strength and durability in finished product. Shop-paint all items not specified to be galvanized after fabrication.

DIVISION 6 – WOOD AND PLASTICS

STATE OF TEXAS
VICTOR M. DeANDA JR.
92641
LICENSED
PROFESSIONAL ENGINEER

Exp. 09/30/12

02/29/12

SECTION 06100 - ROUGH CARPENTRY

PART 1 - GENERAL

1.1 RELATED DOCUMENTS

A. Drawings and general provisions of Contract, including General and Supplementary Conditions and Division 1 Specification Sections, apply to this Section.

1.2 SUMMARY

A. This Section includes the following:

1. Framing with dimension lumber.
2. Framing with engineered wood products.
3. Wood grounds, nailers, and blocking.
4. Wood furring.
5. Sheathing.

B. Related Sections: The following Sections contain requirements that relate to this Section:

1. Division 6 Section "Prefabricated Metal-Plate-Connected Wood Trusses."
2. Division 6 Section "Finish Carpentry" for nonstructural carpentry items exposed to view and not specified in another Section.
3. Division 6 Section "Exterior Architectural Woodwork" for exterior woodwork specially fabricated for this Project.
4. Division 6 Section "Interior Architectural Woodwork" for interior woodwork specially fabricated for this Project.

1.3 DEFINITIONS

A. Rough carpentry includes carpentry work not specified as part of other Sections and generally not exposed, unless otherwise specified.

1.4 SUBMITTALS

A. General: Submit the following in accordance with Conditions of Contract and Division 1 Specification Sections.

B. Product data for the following products:

1. Engineered wood products.
2. Insulating sheathing.
3. Metal framing anchors.
4. Construction adhesives.

C. Material certificates for dimensional lumber specified to comply with minimum allowable unit stresses. Indicate species and grade selected for each use as well as design values approved by the Board of Review of American Lumber Standards Committee.

D. Wood treatment data as follows including chemical treatment manufacturer's instructions for handling, storing,

installation, and finishing of treated material:

1. For each type of preservative treated wood product include certification by treating plant stating type of preservative solution and pressure process used, net amount of preservative retained, and compliance with applicable standards.

E. Research reports or evaluation reports of the model code organization acceptable to authorities having jurisdiction evidencing compliance of the following wood products with specified requirements and building code in effect for Project.

1. Engineered wood products.
2. Metal framing anchors.
3. Power driven fasteners.

1.5 QUALITY ASSURANCE

A. Single-Source Responsibility for Engineered Wood Products: Obtain each type of engineered wood products from one source from a single manufacturer.

1.6 DELIVERY, STORAGE, AND HANDLING

A. Delivery and Storage: Keep materials under cover and dry. Protect against exposure to weather and contact with damp or wet surfaces. Stack lumber as well as plywood and other panels; provide for air circulation within and around stacks and under temporary coverings including polyethylene and similar materials.

1. For lumber and plywood pressure treated with waterborne chemicals, place spacers between each bundle to provide air circulation.

PART 2 - PRODUCTS

2.1 LUMBER, GENERAL

A. Lumber Standards: Furnish lumber manufactured to comply with PS 20 "American Softwood Lumber Standard" and with applicable grading rules of inspection agencies certified by American Lumber Standards Committee's (ALSC) Board of Review.

B. Inspection Agencies: Inspection agencies and the abbreviations used to reference them with lumber grades and species include the following:

1. SPIB - Southern Pine Inspection Bureau.
2. WCLIB - West Coast Lumber Inspection Bureau.
3. WWPA - Western Wood Products Association.

C. Grade Stamps: Provide lumber with each piece factory-marked with grade stamp of inspection agency evidencing compliance with grading rule requirements and identifying grading agency, grade, species, moisture content at time of surfacing, and mill.

1. For exposed lumber furnish pieces with grade stamps applied to ends or back of each piece; or omit grade stamps entirely and provide certificates of grade compliance issued by inspection agency.

D. Nominal sizes are indicated, except as shown by detail dimensions. Provide actual sizes as required by PS 20, for

moisture content specified for each use.

1. Provide dressed lumber, S4S, unless otherwise indicated.
2. Provide seasoned lumber with 19 percent maximum moisture content at time of dressing and shipment for sizes 2 inches or less in nominal thickness, unless otherwise indicated.

2.2 DIMENSION LUMBER

A. For light framing provide "Stud," "No. 3," or "Standard" grade lumber for stud framing (2 to 4 inches thick, 2 to 4 inches wide, 10 feet and shorter) and "Stud" or "No. 3" grade for other light framing (2 to 4 inches thick, 2 to 6 inches wide), any species.

B. For structural framing (2 to 4 inches thick, 5 inches and wider), provide the following grade and species:

1. Southern Pine graded under SPIB rules.

C. For exposed framing lumber provide material complying with the following requirements:

1. Definition: Exposed framing refers to dimension lumber that is not concealed by other construction and is indicated to receive a stained or natural finish.
2. Grading: Material hand-selected at factory from lumber of species and grade indicated below that complies with "Appearance" grade requirements of ALSC National Grading Rule; issue inspection certificate of inspection agency for selected material.

a. Same species and grade as indicated for structural framing.

2.3 BOARDS

A. Exposed Boards: Where boards will be exposed in the finished work, provide the following:

1. Where transparent or natural finish or no finish is indicated, provide the following:

a. Western Red Cedar, "C Select/A All Heart" grade per WWPA rules.

2. Where painted finish is indicated, provide "No. 1 Boards" per SPIB rules, "Select Merchantable Boards" per WCLIB rules, or "No. 2 Common Boards & Better" per WWPA rules.

B. Concealed Boards: Where boards will be concealed by other work, provide lumber of 19 percent maximum moisture content (S-DRY or KD-19) and of following species and grade:

1. Redwood "Construction Common" per RIS rules, Southern Pine "No. 2 Boards" per SPIB rules, or any species graded "Construction Boards" or "No. 3 Common" per WCLIB or WWPA rules.
2. Redwood "Merchantable" per RIS rules, Southern Pine "No. 2 Boards" per SPIB rules, or any species graded "Standard" or "No. 3 Common Boards" per WCLIB or WWPA rules.

C. Board Sizes: Provide sizes indicated or, if not indicated (for sheathing, subflooring and similar uses), provide 1-inch by 8-inch boards.

2.4 MISCELLANEOUS LUMBER

A. General: Provide lumber for support or attachment of other construction including rooftop equipment curbs and support bases, cant strips, bucks, nailers, blocking, furring, grounds, stripping, and similar members.

B. Fabricate miscellaneous lumber from dimension lumber of sizes indicated and into shapes shown.

C. Moisture content: 19 percent maximum for lumber items not specified to receive wood preservative treatment.

D. Grade: "Standard" grade light-framing-size lumber of any species or board-size lumber as required. "No. 3 Common" or "Standard" grade boards per WCLIB or WWPA rules or "No. 2 Boards" per SPIB rules.

2.5 ENGINEERED WOOD PRODUCTS

A. General: Provide engineered wood products for which current model code evaluation/research reports exist that are acceptable to authorities having jurisdiction and that evidence compliance for the application indicated with specified requirements and the building code in effect for this Project.

B. Laminated Veneer Lumber: Lumber manufactured by laminating wood veneers in a continuous press using an exterior-type adhesives complying with ASTM D 2559 to produce members with grain of veneers parallel with their lengths and complying with the following requirements:

1. Veneer Characteristics: Douglas fir or southern pine veneers of varying thickness by widths and lengths standard with manufacturer, end-jointed with a lap-joint, butt joint, or scarf joint.
2. Allowable Design Stresses: As published by manufacturer, determined from empirical data or by rational engineering analysis, and demonstrated by comprehensive testing performed by a qualified independent testing laboratory.
3. Allowable Design Stresses: As follows, determined from empirical data or by rational engineering analysis, and demonstrated by comprehensive testing performed by a qualified independent testing laboratory:

   a. Extreme Fiber Stress in Bending (Fb): 2400 psi (for 12-inch deep members).
   b. Modulus of Elasticity (E): 1,700,000 psi.
   c. Tension parallel to Grain (Ft): 1150 psi.
   d. Compression Parallel to Grain (Fc): 1700 psi.
   e. Compression Perpendicular to Grain: 650 psi
   f. Horizontal Shear (Fv): 200 psi

4. Sizes: As indicated.

2.6 PARTICLEBOARD

A. General: Manufacture and factory-mark each particleboard panel to comply with ANSI A 208.1 for grade indicated. Provide thickness indicated.

B. Particleboard Underlayment: Grade 1-M-1, factory marked with NPA grade mark "Floor Underlayment."

C. Particleboard Subflooring: Grade 2-M-W (waferboard) or Grade 2-M-3.

D. Particleboard Wall Sheathing: Grade 2-M-1.

E. Particleboard Roof Sheathing: Grade 2-M-W (waferboard).

2.7 GYPSUM SHEATHING

A. Products: Subject to compliance with requirements, provide one of the following:

1. Gypsum Sheathing Board with Water-Resistant Core, Regular Type:

   a. "Centex American Gypsum Sheathing," Centex American Gypsum Co.
   b. "Gyproc Gypsum Sheathing," Domtar Gypsum Co.
   c. "G-P Gypsum Sheathing," Georgia-Pacific Corp.
   d. "Gold Bond Gypsum Sheathing," Gold Bond Building Products Div., National Gypsum Co.
   e. "USG Gypsum Sheathing," United States Gypsum Co.

2. Gypsum Sheathing Board with Water-Resistant Core, Type X:

   a. "Centex American Gypsum Sheathing," Centex American Gypsum Co.
   b. "Gyproc Fireguard Sheathing," Domtar Gypsum Co.
   c. "G-P Firestop Sheathing," Georgia-Pacific Corp.
   d. "Gold Bond Fire Shield Jumbo Sheathing," Gold Bond Building Products Div., National Gypsum Co.
   e. "USG Firecode Type X Gypsum Sheathing," United States Gypsum Co.

2.8 FASTENERS

A. General: Provide fasteners of size and type indicated that comply with requirements specified in this article for material and manufacture.

   1. Where rough carpentry is exposed to weather, in ground contact, or in area of high relative humidity, provide fasteners with a hot-dip zinc coating per ASTM A 153 or of AISI Type 304 stainless steel.

B. Nails, Wire, Brads, and Staples: FS FF-N-105.

C. Power Driven Fasteners: National Evaluation Report NER-272.

D. Wood Screws: ANSI B18.6.1.

E. Lag Bolts: ANSI B18.2.1.

F. Bolts: Steel bolts complying with ASTM A 307, Grade A; with ASTM A 563 hex nuts and where indicated, flat washers.

2.9 METAL FRAMING ANCHORS

A. General: Provide metal framing anchors of type, size, metal, and finish indicated that comply with requirements specified including the following:

   1. Current Evaluation/Research Reports: Provide products for which model code evaluation/research reports exist that are acceptable to authorities having jurisdiction and that evidence compliance of metal framing anchors for application indicated with the building code in effect for this Project.
   2. Allowable Design Loads: Provide products for which manufacturer publishes allowable design loads that are determined from empirical data or by rational engineering analysis and that are demonstrated by comprehensive testing performed by a qualified independent testing laboratory.

B. Galvanized Steel Sheet: Steel sheet zinc-coated by hot-dip process on continuous lines prior to fabrication to comply with ASTM A 525 for Coating Designation G60 and with ASTM A 446, Grade A (structural quality); ASTM A 526 (commercial quality); or ASTM A 527 (lock-forming quality); as standard with manufacturer for type of anchor indicated.

   1. Use galvanized steel framing anchors for rough carpentry exposed to weather, in ground contact, or in area of

high relative humidity, and where indicated.

C. Painted Steel Sheet: ASTM A 366 (commercial quality) cold rolled steel sheet or ASTM A 570, Grade 33 (structural quality) hot-rolled steel sheet, as standard with manufacturer for type of anchor indicated, coated after fabrication with manufacturers standard, fast-curing, lead-free "universal primer" resistant to normal atmospheric corrosion.
   1. Use painted steel framing anchors for rough carpentry not exposed to weather, in ground contact, or in area of high relative humidity.

2.10 MISCELLANEOUS MATERIALS

A. Sill Sealer Gaskets: Glass fiber resilient insulation fabricated in strip form for use as a sill sealer; 1 inch nominal thickness compressible to 1/32 inch; selected from manufacturer's standard widths to suit width of sill members indicated; in rolls of 50 feet or 100 feet in length.

B. Water Repellent Preservative: NWWDA-tested and -accepted formulation containing 3-iodo-2-propynyl butyl carbonate (IPBC) as its active ingredient.

PART 3 - EXECUTION

3.1 INSTALLATION, GENERAL

A. Discard units of material with defects that impair quality of rough carpentry construction and that are too small to use in fabricating rough carpentry with minimum joints or optimum joint arrangement.

B. Set rough carpentry to required levels and lines, with members plumb and true to line and cut and fitted.

C. Fit rough carpentry to other construction; scribe and cope as required for accurate fit. Correlate location of furring, nailers, blocking, grounds, and similar supports to allow attachment of other construction.

D. Securely attach rough carpentry work to substrate by anchoring and fastening as indicated.

E. Countersink nail heads on exposed carpentry work and fill holes.

F. Use common wire nails, unless otherwise indicated. Use finishing nails for finish work. Select fasteners of size that will not penetrate members where opposite side will be exposed to view or will receive finish materials. Make tight connections between members. Install fasteners without splitting of wood; predrill as required.

3.2 WOOD GROUNDS, NAILERS, BLOCKING, AND SLEEPERS

A. Install wood grounds, nailers, blocking, and sleepers where shown and where required for screeding or attachment of other work. Form to shapes as shown and cut as required for true line and level of work to be attached. Coordinate location with other work involved.

B. Attach to substrates as required to support applied loading. Countersink bolts and nuts flush with surfaces, unless otherwise indicated. Build into masonry during installation of masonry work. Where possible, anchor to formwork before concrete placement.

C. Install permanent grounds of dressed, preservative treated, key-bevelled lumber not less than 1-1/2 inches wide and of thickness required to bring face of ground to exact thickness of finish material involved. Remove temporary grounds

when no longer required.

3.3 WOOD FURRING

A. Install plumb and level with closure strips at edges and openings. Shim with wood as required for tolerance of finished work.

1. Firestop furred spaces on walls at each floor level and at ceiling line of top story, with wood blocking or noncombustible materials, accurately fitted to close furred spaces.

B. Furring to Receive Plywood Paneling: Install 1-inch by 3-inch furring at 2 feet o.c., horizontally and vertically. Select furring for freedom from knots capable of producing bent-over nails and resulting damage to paneling.

C. Furring to Receive Gypsum Drywall: Install 1-inch by 2-inch furring at 16 inches o.c., vertically.

D. Furring to Receive Plaster Lath: Install 1-inch by 2-inch furring at 16 inches o.c., vertically.

E. Suspended Furring: Install suspended furring members of size and spacing indicated, including hangers and attachment devices. Level to a tolerance of 1/8 inch in 10 feet, except 1/4 inch in 10 feet for thick-coat plaster work

3.4 WOOD FRAMING, GENERAL

A. Framing Standard: Comply with N.F.P.A. "Manual for Wood Frame Construction," unless otherwise indicated.

B. Framing with Engineered Wood Products: Install framing composed of engineered wood products to comply with manufacturer's directions.

C. Install framing members of size and spacing indicated.

D. Anchor and nail as shown, and to comply with the following:

1. National Evaluation Report No. NER-272 for pneumatic or mechanical driven staples, P-Nails, and allied fasteners.
2. Published requirements of manufacturer of metal framing anchors.
3. "Recommended Nailing Schedule" of referenced framing standard and with N.F.P.A. "National Design Specifications for Wood Construction."
4. "Fastening Schedule," of the International Building Code 2000.

E. Do not splice structural members between supports.

F. Firestop concealed spaces of wood framed walls and partitions at each floor level and at the ceiling line of the top story. Where firestops are not automatically provided by the framing system used, use closely fitted wood blocks of nominal 2-inch-thick lumber of the same width as framing members.

3.5 STUD FRAMING

A. General: Arrange studs so that wide face of stud is perpendicular to direction of wall or partition and narrow face is parallel. Install single bottom plate and double top plates using 2-inch-thick members whose widths equal that of studs; except single top plate may be used for non-load-bearing partitions. Nail or anchor plates to supporting construction.

1. For exterior walls install 2-inch by 6-inch wood studs spaced 16 inches o.c.
2. For interior partitions and walls install 2-inch by 4-inch wood studs spaced 16 inches o.c.

B. Construct corners and intersections with not less than 3 studs. Install miscellaneous blocking and framing as shown and as required for support of facing materials, fixtures, specialty items, and trim.

1. Install continuous horizontal blocking row at mid-height of single-story partitions over 8 feet high and at midpoint of multi-story partitions, using 2-inch thick members of same width as wall or partitions.

C. Frame openings with multiple studs and headers. Install nailed header members of thickness equal to width of studs. Set headers on edge and support on jamb studs.

1. For nonbearing partitions, install double-jamb studs and headers not less than 4 inches deep for openings 3 feet and less in width, and not less than 6 inches deep for wider openings.
2. For load-bearing partitions, install double-jamb studs for openings 6 feet and less in width, and triple-jamb studs for wider openings. Install headers of depth shown, or if not shown, as recommended by N.F.P.A. "Manual for House Framing."

D. Install diagonal bracing in stud framing of exterior walls, except as otherwise indicated. Brace both walls at each external corner, full story height, at a 45 degree angle, using either a let-in 1 by 4 or 2 by 4 blocking or metal diagonal bracing. Omit bracing where following types of sheathing are indicated.

1. Plywood sheathing or corner bracing, 4-feet-wide panels vertically.

3.6 FLOOR JOIST FRAMING

A. General: Install floor joists with crown edge up and support ends of each member with not less than 1-1/2 inches of bearing on wood or metal, or 3 inches on masonry. Attach floor joists as follows:

1. To wood bearing members by toe nailing or metal framing anchors.

B. Fire-cut members built into masonry.

C. Frame openings with headers and trimmers supported by metal joist hangers; double headers and trimmers where span of header exceeds 4 feet.

D. Do not notch in middle third of joists; limit notches to 1/6-depth of joist, 1/3 at ends. Do not bore holes larger than 1/3-depth of joist or locate closer than 2 inches from top or bottom. Install solid blocking (2 inches thick by depth of joist) at ends of joists unless nailed to header or bearing member.

E. Lap members framing from opposite sides of beams, girders or partitions not less than 4 inches or securely tie opposing members together. Install solid blocking (2 inches thick by depth of joist) over supports.

F. Anchor members paralleling masonry with 1/4-inch by 1-1/4-inch metal strap anchors spaced not more than 8 feet o.c. Extend anchors at least 4 inches into masonry, turn up 4 inches and extend over and fasten to 3 joists.

G. Under jamb studs at openings, install solid blocking between joist.

H. Under non-load-bearing partitions, install double joists separated by solid blocking equal to depth of studs above.

1. Install triple-joists separated as above, under partitions receiving ceramic tile and similar heavy finishes or fixtures.

1.5 DELIVERY, STORAGE, AND HANDLING

1. Handle and store trusses with care and to comply with TPI recommendations to avoid damage from bending, overturning or other cause.

PART 2 – PRODUCTS
2.1 LUMBER, GENERAL:

A. Lumber Standards: Provide lumber S4S, S-Dry, unless otherwise indicates grade marked, complying with PS 20 and requirements indicated.

B. Lumber Species: Any softwood, at Contractor's option, graded with WWPA, WCPA, WCLB, SPIB or NLGA rules, which complies with other requirements.

C. Lumber Grade: Any grade fulfilling requirements indicated.

D. Stress Rating: Provide lumber, which has been graded or tested and certified to comply with stress rating indicating.
Fb = 1850 psi. Ft. = 1050 psi. Fc = 1450 psi. E = 1,800,000 psi.

2.2 METAL CONNECTOR PLATES

A. Metal Connector Plates: Metal as indicated, not less than 0.036" thick, coated thickness.
B. Galvanized Sheet Steel: ASTM A 446, Grade A, G60.
C. Electrolytic Zinc-Coated Steel Sheet: ASTM A 591, Class C, with minimum structural quality equivalent to ASTM A 446, Grade A.
D. Stainless Steel: ASTM A 167, Type 304, with minimum structural quality equivalent to ASTM A 446, Grade A

2.3 METAL FRAMING ANCHORS

A. Fasteners and Anchorages: Of size, type, material and finish suited to application shown and complying with applicable standards including FS FF-N-105 and FF-W-92, and ANSI B18.6.1.

2.4 FABRICATION

A. Fabricate and assemble trusses to provide units of configuration indicated, with closely fitted joins and connectors plates securely fastened to wood members.

PART 3 – EXECUTION
3.1 INSTALLATION
A. General: Install miscellaneous steel connectors, anchors, and accessories.

B. Plan and execute erection procedures so that close fit and neat appearance of joints and structure as a whole will not be impaired. When hoisting members into place, use padded or non-marring slings, and protect corners with wood blocking.

C. Adequately brace members as they are placed to maintain safe position until full stability is provided.

D. Install trusses to comply with TPI references standards and other indicated requirements.

END OF SECTION 06192

06200 FINISH CARPENTRY

Product Data: Submit for factory-fabricated siding and paneling.

Samples: Submit samples of the following items:

Lumber machined to stock and custom patterns, 2'-0" long x pattern width and thickness, for each configuration, species and grade indicated.

Finish one side and one edge of samples for transparent finished items.

Plywood for transparent finish, 2'-0" panel width, finish applied to upper half of each piece.

Softwood Lumber: Comply with PS 20 and applicable grading rules of respective grading and inspecting agency for species and product indicated. Manufacture to sizes and patterns using seasoned lumber. Use pieces made from solid lumber for transparent finished work, and glued-up or solid, at contractor's option for painted work.

Exterior Standing and Running Trim: Boards and worked lumber products complying with requirements indicated below including those of grading agency listed with species:

Species: Spruce-pine-fir; WWPA .

Grade: B & Btr. - 1 & 2 Clear

Texture: Surfaced (Smooth).

Furnish surfaced lumber for painted trim.

Siding, Board Type: Lumber worked to pattern and size indicated, complying with requirements indicated below including those of grading agency listed with species:

Type: Texture 1-11 plywood

Fasteners and Anchorages: Provide nails, screws and other anchoring devices of type, size, material and finish suitable for intended use and required to provide secure attachment, concealed where possible.

Hot-dip galvanize fasteners for work exposed to exterior and high humidities to comply with ASTM A 153.

Install finish carpentry work plumb, level, true and straight with no distortions. Shim as required using concealed shims. Scribe and cut finish carpentry items to fit adjoining work. Anchor finish carpentry work securely to supports and substrates, using concealed fasteners and blind nailing where possible. Use fine finishing nails for exposed nailing except as indicated, countersunk and filled flush with finished surface.

Standing and Running Trim: Install with minimum number of joints possible, using full-length pieces from maximum length of lumber available. Cope at returns, miter at corners to produce tight fitting joints. Use scarf joints for end-to-end joints.

Board-Type Paneling: Comply with paneling manufacturer's instructions using adhesive or concealed clip system as appropriate to type of substrate provided or as indicated.

END OF SECTION 06200

06400 ARCHITECTURAL WOODWORK

Standards: Comply with applicable requirements of the following: "Architectural Woodwork Quality Standards" by AWI.

Shop Drawings: Submit shop drawings for each item of Architectural woodwork.

Samples: Submit finished samples of each wood species and cut indicated for transparent finish; of each material indicated for opaque finish; of each color, pattern and finish of plastic laminate; and of each type of cabinet hardware.

Exterior Wood:

Lumber Species for Transparent Finish: Clear Heart Cedar

Interior Wood:

Lumber Species for Transparent Finish: Rift-sawn Red Oak.

Lumber Species for Opaque Finish: Any closed-grain hardwood listed in referenced woodworking standard.

Veneer Species for Transparent Finish: Rift-cut Red Oak.

Panel Product for Opaque Finish: Medium density fiberboard.

Plastic Laminate: High pressure decorative laminate complying with NEMA LD 3, in color, pattern and finish indicated, or, if not indicated, as selected by Architect from laminate manufacturers' standard products.

Exterior Standing and Running Trim for Transparent Finish:

Grade: Custom.

Interior Standing and Running Trim and Rails for Opaque Finish:

Grade: Economy.

Wood Cabinets for Transparent Finish:

Grade: Custom.

Construction: Flush overlay.

Plastic Laminate for Exposed Surfaces: GP-50 for nonpostformed surfaces; PF-42 for postformed surfaces.

Edge Treatment: Same as laminate cladding on faces. exposed cabinet surfaces.

Closet and Utility Shelving for Opaque Finish:

Grade: Custom.

Shelving Material: Birch-faced veneer core plywood.

Exterior Door Frames for Opaque Finish:

Grade: Premium.

Interior Door Frames for Opaque Finish:

Grade: Custom.

Finishes for Architectural Woodwork: Finishing of architectural woodwork is work of this section to the extent indicated.

Provide factory finish system of type indicated for the following types of architectural woodwork.

Casework.

Shop-apply prime/base coat to the following types of architectural woodwork, in compliance with requirements indicated in Division-9 section "Painting".

Interior trim for opaque finish. Wood storage shelving.

Cabinet Hardware and Accessory Materials: Provide prefabricated factory assembled wood cabinets complete with hardware.

Installation: Install architectural woodwork plumb, level and straight with no distortion. Shim as required using concealed shims. Scribe and cut woodwork to fit adjoining work. Anchor woodwork to anchors or blocking or directly to substrates, using concealed fasteners.

Standing and Running Trim: Install with minimum number of joints possible using full-length pieces from maximum length of lumber available. Cope at returns, miter at corners.

Cabinets: Install without distortion so that doors and drawers fit openings and are properly aligned.

Paneling: Anchor paneling to supporting substrate with concealed panel hanger clips. Blind nail back-up strips and similar associated trim and framing.

TOPS: Anchor securely to base units.

Wood Storage Shelving: Complete assembly of units and install in areas indicated including hardware and accessories.

END OF SECTION 06400
END OF DIVISION 6

DIVISION 7 THERMAL AND MOISTURE PROTECTION

07200 INSULATION

PART 1 - GENERAL

RELATED DOCUMENTS: Drawings and general provisions of Contract, including General and Supplementary Conditions and Division - I Specification sections, apply to work of this section.

DESCRIPTION OF WORK:

Extent of insulation work is shown on drawings and indicated by provisions of this section.

Applications of insulation specified in this section include the following:

Board-type building insulation, concealed.

Blanket-type building insulation.

Granular Vermiculite Insulation.

QUALITY ASSURANCE:

Thermal Conductivity: Thicknesses indicate are for thermal conductivity (k-value at 750 F or 240C) specified for each material. Provide adjusted thicknesses as directed for equivalent use of material having a different thermal conductivity. Where insulation is identified by "R" value, provide thickness to achieve indicated value.

Federal Specifications: Where compliance with FS standard is indicated, specified requirements for marking individual boards/batts/blankets are waived, provided packages of units are labeled to show compliances.

SUBMITTALS:

Product Data: Submit manufacturer's product specifications and installation instructions for each type of insulation and vapor barrier material required.

Certified Tests: With product data, submit copies of certified test report showing compliance with specified performance values, including k-values (aged values for plastic insulations), densities, compression strengths, burning characteristics, perm ratings, water absorption ratings and similar ratings.

PRODUCT HANDLING:

General Protection: Protect insulations from physical damage and from becoming wet, soiled, or covered with ice or snow. Comply with manufacturer's recommendations for handling, storage and protection during installation.

Protection for plastic insulation:

Do not expose to sunlight, except to extent necessary for period of installation and concealment.

Protect against ignition at all times. Do not deliver plastic insulating materials to project site ahead of installation time. Complete installation and concealment of plastic materials as rapidly as possible in each area of work.

PART 2 - PRODUCTS

MATERIALS:

Molded Polystyrene Board Insulation (MPsBd-Ins): Closed-cell, expanded polystyrene beads molded into rigid boards, complying with FS HH-I-524, Type I, 10 psi compressive strength; 4.0X maximum water absorption; k-value of 0.278; 5.0 perm-inch max. water vapor transmission; manufacturer's standard lengths and widths.

Available Manufacturers: Subject to compliance with requirements, manufacturers offering products which may be incorporated in the work include, but are not limited to, the following:

Manufacturer: Subject to compliance with requirements, provide products of one of the following:

Allied Foam Products, Inc.; Gainsville, GA
Arizona Diversified Prod., Inc.; Phoenix, AZ
Big Sky Insulations, Unltd.; Belgrade, MT
Contour Packaging, Inc.; Lenexa, KS
Foam Products Corp.; St. Louis, MO
Grace Const. Products Div.; Cambridge, MA
Insulation Corp. of America; Allentown, PA
Michigan Foam Products, Inc.; Grand Rapids, MI
Poly-Foam, Inc.; Lester Prairie, MN
Therma Foam, Inc.; Fort Worth, TX
Toyad Corps.; Latrobe, PA
United States Mineral Prod. co.; Stanhope, NJ
Vertex, Inc.; Los Angeles, CA

Mineral/Glass Fiber Blanket/Batt Insulation (M/GFB-Ins):
Inorganic (nonasbestos) fibers formed with hinders into resilient flexible blankets or semi-rigid batts; FS HH-I-521, Type as indicated, densities of not less than 0.5 lb. per cu. ft. for glass fiber units and not less than 2.5 lb. per cu. ft. for mineral wool units, k-value of 0.27; manufacturer's standard lengths and widths as required to coordinate with spaces to be insulated; types as follows:

Paper Faced Units: Provide one face including intergral nailing flanges with 0.5 perm rated paper facing; other face (if any) minimum 5.0 perm rated.

Flame-Spread Rating: Provide units with rating of 25, ASTM E 84.

Granular Vermiculite Insulation: FS HH-I-558 or ASTM C 516, k-value of 0.45, treated for water repellency where used in exterior wall.

Available Manufacturers: Subject to compliance with requirements, manufacturers offering products which may be incorporated in the work include, but are not limited to, the following:

Manufacturer: Subject to compliance with requirements, provide products of one of the following:

Certain-Teed Products Corp.; Valley Forge, PA
Clecon Inc.; Cleveland, OH
Manville Bldg Materials Corp.; Denver, CO
Mizell Bros. Co.; Atlanta, GA
Owens-Corning Fiberglas Corp.; Toledo, OH
Rockwool Industries, Inc.; Englewood, CO
United States Gypsum Co.; Chicago, IL

PART 3 - EXECUTION

INSPECTION AND PREPARATION:

Installer must examine substrates and conditions under which insulation work is to be performed, and must notify Contractor in writing of unsatisfactory conditions. Do not proceed with insulation work until unsatisfactory conditions have been corrected in a manner acceptable to Installer.

Clean substrates of substances harmful to insulations , including removal of projections which might puncture vapor barriers.

INSTALLATION:

General:

Comply with manufacturer's instructions for particular conditions of installation in each case. If printed instructions are not available or do not apply to project conditions, consult manufacturer's technical representative for specific recommendations before proceeding with work.

Extend insulation full thickness as shown over entire area to be insulated. Cut and fit tightly around obstructions, and fill voids with insulation. Remove projections which interfere with placement.

Apply a single layer of insulation of required thickness, unless otherwise shown or required to make up total thickness.

General Building Insulation:

Apply insulation units to substrate by method indicated, complying with manufacturer's recommendations. If no specific method is indicated, bond units to substrate with adhesive or use mechanical anchorage to provide permanent placement and support of units.

Seal .ioints between closed-cell (non-breathing insulation units by applying mastic or sealant to edges of each unit to form a tight seal as units are shoved into place. Fill voids in completed installation with mastic or sealant.

Set vapor barrier faced units with vapor barrier to warm side of construction, except as otherwise shown. Do not obstruct ventilation spaces, except for firestopping.

Tape joints and ruptures in vapor barriers, and seal each continuous area of insulation to surrounding construction to ensure vapor-tight installation.

Set reflective foil-faced units accurately with air space in front of foil as shown. Provide not less than 0.75" air space where possible.

Vapor Barrier Installations:

General: Extend vapor barriers to extremities of areas to be protected from vapor transmission. Secure in place with adhesives or other anchorage system as indicated. Extend vapor barriers to cover miscellaneous voids in insulated substrates, including those which have been stuffed with loose fiber type insulation.

Seal ioints/seams in vapor barriers, seal to objects penetrating barriers, and seal to other surfaces at extremities of coverage by lapping with adhesive or taping to form a continuous barrier.

Lap edges of sheets of vapor barrier not less than 4" so as to provide complete coverage of protected areas.

Repair Punctures and tears in vapor barriers, immediately before concealment by other work. Cover with adhesively applied vapor barrier material or with selfadhesive vapor barrier tape.

PROTECTION:

General: Protect installed insulation and vapor barriers from harmful weather exposures and from possible physical abuses, where possible by nondelayed installation of concealing work or, where that is not possible, by temporary covering or enclosure. Installer shall advise Contractor of exposure hazards, including possible sources of deterioration and fire hazards.

END OF SECTION 07200

07410 PREFORMED ROOF AND WALL PANELS

General: Furnish all labor, materials, tools, equipment and services for all preformed roofing, fascia, and soffits as indicated, in accord with provisions of Contract Documents. Completely coordinate with work of all other trades. Although such work is not specifically indicated, furnish and install all supplementary or miscellaneous items, appurtenances and divices incidental to or necessary for a sound, secure and complete installation. See Division-1 for General Requirements.

Related work specified elsewhere: Structural steel: Section 05100; Steel Joists: Section 05200 or 05400; Flashing and sheet metal: Section 07600.

Quality Assurance: Applicable Standards:

1. SMACNA; "Architectural Sheet Metal Manual", Sheet Metal and Air-Conditioning Contractors National Association, Inc.
2. AISC; "Steel Construction Manual" American Institute of Steel Construction.
3. AISI; "Cold Form Steel Design Manual", American Iron and Steel Institute.
4. ASTM A 792-83-AZ50; Specifications for steel sheet, aluminum-zinc alloy coated (galvanized) by the hot dip process, general requirements (galvalume).

Manufacturer's Qualifications: Manufacturer has a minimum of three years experience in manufacturing panels of this nature.

Installer's Qualifications: Installation of panels and accessories by installers with a minimum of two years experience in panel projects of this nature.

Submittals:

Shop Drawings:

1. Submit complete shop drawings and erection details to Architect for review. Do not proceed with manufacture prior to review of shop drawings. Do not use drawings prepared by Architect for shop or erection drawings.
2. Shop drawings show methods of erection, elevations, and plans of roof and wall panels, sections and details, anticipated loads, flashings, roof curbs, vents, sealants, interfaces with all materials not supplied and proposed identification of component parts and their finishes.

Submittals:

1. Submit samples and color chips for all proposed finishes.
   a. Submit one 8 in. long sample of panel, including clips (and battens (if applicable)).
   b. Submit two 3 in. x 5 in. color chip samples in color selected by Architect.

Warranty:

1. Metal panel manufacturer, upon final acceptance for project, furnish a warranty covering bare metal against rupture, structural failure, and perforation due to normal atmosperic corrosion exposure for a period of 20 years.
2. Covering panel finish against cracking, checking, blistering, peeling, flaking, chipping, chalking, and fading for a period of twenty (20) years for wall panels and twenty (20) years for roof panels (premium fluorocarbon coating produced with Kynar 500 or Hylar 5000 resin).

Delivery, Storage and Handling:

Delivery: Deliver panels to jobsite properly packaged to provide protection against transportation damage.

Handling: Exercise extreme care in unloading, storing and erecting panels to prevent bending, warping, twisting, and surface damage.

Storage: Store all materials and accessories above ground on well skidded platforms. Store under waterproof covering. Provide proper ventilation to panels to prevent condensation build-up between panels.

Materials:

Panel profile: 3 in. high rib x 18 in. wide panel.

Panel style: Trapezoidal rib, positive snap tgether, standing seam, utilizing male and female rib configurations, with factory applied hot melt mastic in female rib.

Guage: 24 gauge (UL-90 rated).

Substrate: Galvalume steel sheet, 0.5 ounces/square foot, minimum yield of 50,000 p.s.i.

Clip: Articulating clip, providing thermal expansion or contraction, correcting for out-of-plane subframing alignment to a maximum of 7 degrees.

Texture: Smooth

Finish: Bare Galvalume (20 year warranty).

Acceptable Manufacturer: MBCI, Ultra-Dek UD-124 or approved equal.

Fabrication: Roll form panels in continuous lengths, full length of detailed runs. Standard panel length shall be no more than 45 feet. Fabricate trim, flashing and accessories to detailed profiles. Fabricate trim and flashing from same material as panel.

Surface Conditions: Inspect installed work of other trades and verify that such work is complete to a point where this work may continue. Verify that installation may be made in accordance with approved shop drawings and manufacturer's instructions.

Descrepancies: In event of discrepancy, notify Architect. Do not proceed with installation until discrepancies have been resolved.

Installation: Install panels so that they are weathertight, without waves, warps, buckles, fastening stresses or distortion, allowing for expansion and contraction. Install panels in accordance with manufacturer's instructions and shop drawings. Provide concealed anchors at all panel attachement locations. Install panels plumb, level, and straight with seams and ribs/battens parallel, conforming to design as indicated.

Cleaning and Protection: Dispose of execess materials and remove debris from site. Clean work in accordance with manufacturer's recommendations. Protect work against damage until final acceptance. Replace or repair to the satisfaction of the Architect, any work that becomes damaged prior to final acceptance. Touch-up minor scratches and abrasions.

END OF SECTION 07410

07411 METAL ROOF PANELS (ADDITIVE ALTERNATE #1)

PART 1 GENERAL

1.1 SECTION INCLUDES

A. Standing-seam roof panels.

B. Metal roofing accessories.

C. Retro-Fit Framing (above existing roof)

1.2 RELATED SECTIONS

A. Section 05 31 23 – Steel Roof Decking

B. Section 07 22 00 - Roof and Deck Insulation

C. Section 07 62 00 - Sheet Metal Flashing.

D. Section 07 72 00 - Roof Accessories.

1.3 REFERENCES

A. American Society of Civil Engineers: ASCE -7 - Minimum Design Loads for Buildings and Other Structures, version adopted by local Building Code authority having jurisdiction.

B. ASTM A792 - Specification for Steel Sheet, 55% Aluminum-Zinc Alloy-Coated by the Hot-Dip Process.

C. ASTM E1592-01Standard Test Method for Structural Performance of Sheet Metal Roof and Siding System by Uniform Static Air Pressure Difference

D. ASTM E1680-95 (Reapproved for 2003) - Standard Test Method for Rate of Air Leakage Through Exterior Metal Roof Panel Systems.

E. ASTM E1646-95 (Reapproved for 2003) Standard Test Method for Rate of Water Penetration Through Exterior Metal Roof Panel Systems By Uniform Static Air Pressure Difference.

F. Factory Mutual 4471 Approval Standard for Class 1 Panel Roofs:

1. Section 4.1 Combustibility-From Below Roof Assembly

2. Section 4.2 Combustibility-From Above Roof Assembly

3. Section 4.3 Wind Uplift Resistance

4. Section 4.4 Foot Traffic Resistance

5. Section 4.5 Hail Damage Resistance

6. Appendix G- Susceptibility to Leakage Test Procedure for Class 1 Panel Roofs.

G. ASTM E2140- Standard Test method for water penetration of metal roof panel systems by static water pressure head.

H. Building Code – as approved by local authority having jurisdiction.

I. SMACNA - Architectural Sheet Metal Manual, Latest Edition.

J. Underwriter's Laboratories:

1. UL 580 - Tests for Uplift Resistance of Roof Assemblies.

2. UL 1897 - Uplift Tests for Roof Covering Systems, latest Edition.

1.4 SUBMITTALS

A. Product Data: Manufacturer literature indicating product specifications, installation instructions, and standard construction details.

B. Shop Drawings: To be prepared by metal roof system manufacturer.

1. Submit roof plan showing panel layout, gutters and downspouts as applicable.

2. Provide metal roof flashing, gutter and downspout shop drawings.

a) Indicate gage and finish of materials.

b) Indicate fastener type, finish and spacing.

c) Indicate locations of field applied sealant.

d) Indicate location size and gauge of all back up plates.

3. Roof Panel Attachment:

a) Roof plan with wind uplift pressure calculations at field, corner and perimeter areas according to version of ASCE-7 referenced by locally-adopted Building Code and the authority having jurisdiction.

b) Roof plan indication roof clip spacing pattern at field, corner, perimeters and where panels are to be fixed from thermal movement.

c) Roof panel attachment plan must be stamped by licensed engineer in State in which project is constructed, certifying roof attachment meets local Building Code requirements for wind uplift.

C. Engineering Calculations: Submit wind uplift pressure calculations according to ASCE 7 Wind Speed for project location with respect to appropriate Importance Factor, Exposure category and Safety Factor. Calculations shall be sealed by a professional engineer licensed to practice structural engineering in the state in which project is located.

D. Samples:

1. Submit two samples, 12" long, full width panel, showing metal gage, seam and required finish.

2. Two samples each for roof panel clip, bearing plate and clip fastener.

3. Submit color samples for Architect's selection.

4. Submit sample warranties:

   a) Coating Warranty.

   b) Manufacturer Water Tightness Warranty complying with this Specification.

   c) Installer Warranty.

E. Certification:

1. Submit roof panel manufacturer's certification that fasteners, clips, backup plates, closures, roof panels and finishes meet specification requirements, wind uplift requirements.

2. Submit roof panel manufacturer's certification that installer meets requirements to install roof system and is qualified to obtain required warranties.

3. Test Reports –Certified test results that indicate roof system meets or exceeds design and performance criteria. Testing to include:

   a) Uplift Testing

      (1) Factory Mutual: Submit documentation that panel system has been tested at Factory Mutual per FM 4471 Section 4.3 and is currently listed.

      (2) Underwriters Laboratory: Submit documentation that panel System has been tested at Underwriters Laboratories per UL-580 and be currently listed under a UL Construction Number.

         (a) Submit documentation that panel system has been tested in accordance with UL-580/1897 and has been tested to failure.

      (3) ASTM E 1592. Submit ASTM E 1592 Test reports prepared by independent test laboratory and stamped by a professional engineer substantiating that roof system will meet the allowable wind pressures with a safety factor of 2.0.

   b) Static Water Testing Certification:

      (1) The panel system shall be tested in accordance with FM4471 Appendix G, and pass with no leakage. The test specimen must successfully withstand being submerged under 6" of water for a minimum period of 7 days.

      (2) The panel system shall be tested in accordance with ASTM E2140- and pass with no leakage. The test specimen must successfully withstand being submerged under 6" of water for a minimum period of 6 hours.

   c) Air and Water Testing Certification

      (1) ASTM E1680 – Manufacturer's test data for air infiltration rates up to 20 pounds per square inch differential pressure.

      (2) ASTME1646- Manufacturer's test data for water infiltration rates up to 20 pounds per square inch differential pressure.

   d) Impact Resistance

(1) Submit documentation that panel system has been tested at Factory Mutual per FM 4471 Section 4.5 and is currently rated for "Severe Hail"

1.5 DELIVERY, STORAGE AND HANDLING

A. Deliver panels to jobsite properly packaged to provide protection against transportation damage.

B. Exercise care in unloading, storing and erecting panels to prevent bending, warping, twisting, and surface damage.

C. Store all material and accessories above ground on well skidded platforms. Store under waterproof covering. Provide proper ventilation to panels to prevent condensation build-up between each panel.

D. Remove from site panels which are damaged, or become water-stained during storage and handling. Remove, and replace materials, which are installed damage, or stained.

1.6 WARRANTIES

A. Panel Coating: Furnish manufacturer's 20-year warranty panel coating warranty covering checking, crazing, peeling, chalking, fading, and adhesion.

B. Metal Roof Warranty:

1. Manufacturer's 20 year No Dollar Limit Weather Tightness Warranty.

a) Warranties supplied by Metal Roof Installer or 3rd Party Warranties are not acceptable.

2. Coverage includes roof panels, roof flashing, roof penetrations and roof curbs.

1.7 DESIGN AND PERFORMANCE CRITERIA

A. Thermal Movement: Metal Roofing system, including flashing, shall accommodate unlimited thermal movement without buckling or excess stress on the structure.

B. Roof panel and trim attachments will be designed to satisfy the requirements of the roof design (shown in shop drawings).

C. Maximum wind uplift capacity of roof system shall be determined ASTM E 1592, Standard Test Method for Structural Performance of Sheet Metal Roof and Siding Systems by Uniform Static Air Pressure Difference. Testing shall be reported by an independent ASTM accredited testing laboratory.

D. Maximum wind uplift capacity of roof system shall be determined using certified results from UL 1897-98, Uplift Tests for Roof Covering Systems. Testing of the entire roof assembly shall be conducted in a UL-580 test chamber.

E. Panel system installation shall be in accordance with ASCE 7 Wind Speeds for project location with respect to appropriate Exposure category, Building Importance Factor and a Safety Factor of 2.0.

1.8 COORDINATION

A. Coordinate Work, with installation of other associated Work, to ensure quality application.

B. Coordinate Work with installation of associated metal flashings and building walls.

C. Coordinate Work to minimize foot traffic and construction activity on installed finished surfaces.

D. Coordinate location of pipe penetrations to allow centering of pipe in panel.

E. Coordinate location of roof curbs, to allow proper integration with roof panel seams.

1.9 PRE-ROOFING CONFERENCE

A. Schedule meeting to discuss roof Work before start of work onsite.

B. Comply with requirements of roof Specification Section(s).

C. Required attendees: Contractor, metal deck & roof installer, metal roof system manufacturer's representative, and any other subcontractors who have equipment penetrating the roof or Work that requires roof access or traffic.

1.10 QUALITY ASSURANCE

A. Manufacturer: Manufacturer's facility and equipment must undergo an annual quality assurance audit by Factory Mutual. This assures that manufacturers equipment, procedures and quality program are maintained to insure a uniform product consistent with that which was tested and FM Approved.

B. Installer Qualifications: Installer ("roofer") to perform the Work of this Section, which firm has no fewer than 5 years of successful experience with installation metal roof systems similar to those required for this Project, and is qualified by the roof panel manufacturer, for installation of manufacturer-warranted systems.

C. Field Measurements: Prior to fabrication of panels, take field measurements of structure or substrates to receive panel system. Allow for trimming panel units, where final dimensions cannot be established prior to fabrication.

D. Install a 30 foot wide, quality control area of metal roofing, for review by the Architect, to establish the quality of installation for the roof, and have approved prior to installing additional metal panels.

PART 2 - PRODUCTS

2.1 ROOF PANEL SYSTEM

A. 238T by Architectural Building Components, Houston, TX , or Zip-Rib by Merchant & Evans, Burlington, NJ, or approved equal, meeting the following requirements.

1. Requests for approval must be submitted in writing at least ten (10) days prior to bid date, and are accompanied by all related test reports and design calculations listed in Reference section 1.3 and Design and Performance criteria Section 1.7.

2. Substitute manufacturers will be approved in written addendum to all bidders. Voluntary alternates will not be considered. Substitutions will not be permitted after the bid date of this project.

3. Factory-formed panel, full length, width ranging between 12 and 18 inches based on satisfying minimum negative pressures. Panels shall be symmetrical in design and shall be

mechanically seamed with a field operated electric *seaming* machine provided by the manufacturer.

4. Minimum seam height 2 3/8 inches. Integral seam, double lock and snap together type panels are not acceptable

5. Seam caps, as required by panel system, matching panel finish with two rows of integral factory hot applied sealant.

6. Galvalume coated sheet steel, Type AZ-50, Grade 50 as described in ASTM A792; 24 gauge.

7. Finish: Two coat coil applied, baked-on full-strength (70% resin, PVF2) fluorocarbon coating consisting of a nominal of .25 mil dry film thickness primer, nominal dry film thickness of .75 mil color coat. Finish to be selected from manufacturer's standard color selection. The back side of the material should be .25 mil. Primer and 0.25 polyester wash coat.

8. Roof panel system must allow individual roof panel removal and replacement from any point on the roof without damage to adjacent roof panel(s).

9. Panels must be furnished and installed in continuous lengths from ridge to eave with no overlaps. Panels too long to ship will be manufactured on site using manufacturers employees and equipment.

10. Panel surface characteristics to be chosen by Architect for roof panel manufacturer's available types.

    a) Smooth.

    b) Striations.

    c) Stiffener ribs

    d) Plank

11. Manufacturer watertightness warranty, meeting requirements of this Section.

12. Roof panels proposed for substitution shall fully comply with specified requirements in appearance, assembly, and performance. Substitution request must comply with Division 1 requirements for submission.

2.2 RETRO-FIT FRAMING – To be supplied by metal roof manufacturer only

A. Framing system shall be signed and sealed by a professional engineer licensed in the state of the project location

2.3 FASTENERS AND ACCESSORIES

A. Panel Clip Screw - screw required in wind uplift rating requirements for application, with corrosion-resistant coating, in length necessary to penetrate metal deck minimum 3/4 inch., as supplied by roof panel manufacturer.

B. Roof Panels Clip: types to be determined based on wind uplift pressure calculations

1. Intermittent Clip: 16 gage galvanized steel, one-piece, designed to allow roof panel thermal movement and not contact roof panel cap, as supplied by roof panel manufacturer, marking meeting wind uplift requirements of this Section.

2. Intermittent Clip Bearing Plate: in gage, size and finish as supplied by and approved by roof panel manufacturer for use in roof panel manufacturer's full assembly warranted systems.

3. Fiber Reinforced Polycarbonate Shim Plate: used in lieu of bearing plates in areas where deck is uneven to insure level finished panel surface.

4. Multi Span Clip: as provided by roof panel manufacturer for full assembly warranted systems.

C. Trim and flashing will be of the same gage and finish unless approved otherwise by the metal roof system manufacturer.

1. All sheet metal valleys will be supplied in continuous lengths up to 32'

2. Ridge closures, consisting of metal channel surrounding factory precut closed cell foam, will not be secured through the field of the panel.

3. Trim will be installed specifically as displayed in the manufacturer provided shop drawings. Proposed changes must be approved in writing by the metal roof system manufacturer.

D. Concealed supports, angles, plates, accessories and brackets: in gage and finish as recommended, and furnished by manufacturer.

E. Accessory Screw: Size and screw type as provided by panel manufacturer for each use, with prefinished hex washer head in color to match panels where exposed to view.

F. Rivets: full stainless steel, including mandrel, in size to match application.

G. Field Sealant: Color coordinated primerless silicone, or high grade, non-drying butyl, as supplied by panel manufacturer.

H. Sealant Tape: non-drying, 100 percent solids, high grade butyl tape, as supplied by panel manufacturer, in sizes to match application.

I. Pipe Penetration Flashings: flexible boot type, with stainless steel compression ring, and stainless steel pipe strap, Dektite by Buildex, or approved substitute. Use silicone type at hot pipes.

J. Metal Roof Curbs: welded aluminum, or stainless steel, factory-insulated, with integral cricket, and designed to fit roof panel module, sized to meet application, by L.M. Curbs, or approved substitute.

PART 3 - EXECUTION

3.1 EXAMINATION

A. Field verify all existing conditions, i.e. type of roof, type of insulation, condition and type of decking, type of roof structural members.

B. Remove existing built-up roof, including gravel and insulation to existing deck, or as approved by metal roofing manufacturer.

C. Install new transverse framing system. See Detail "A".

D. Ensure surfaces are ready for panel application.

E. Inspect and ensure surfaces are free from objectionable warp, wave, and buckle before proceeding with installation of pre-formed metal roofing.

F. Ensure substrate is ready to receive metal roofing. Report items for correction and do not proceed with metal roof panel system installation until resolved.

G. Detail "A"

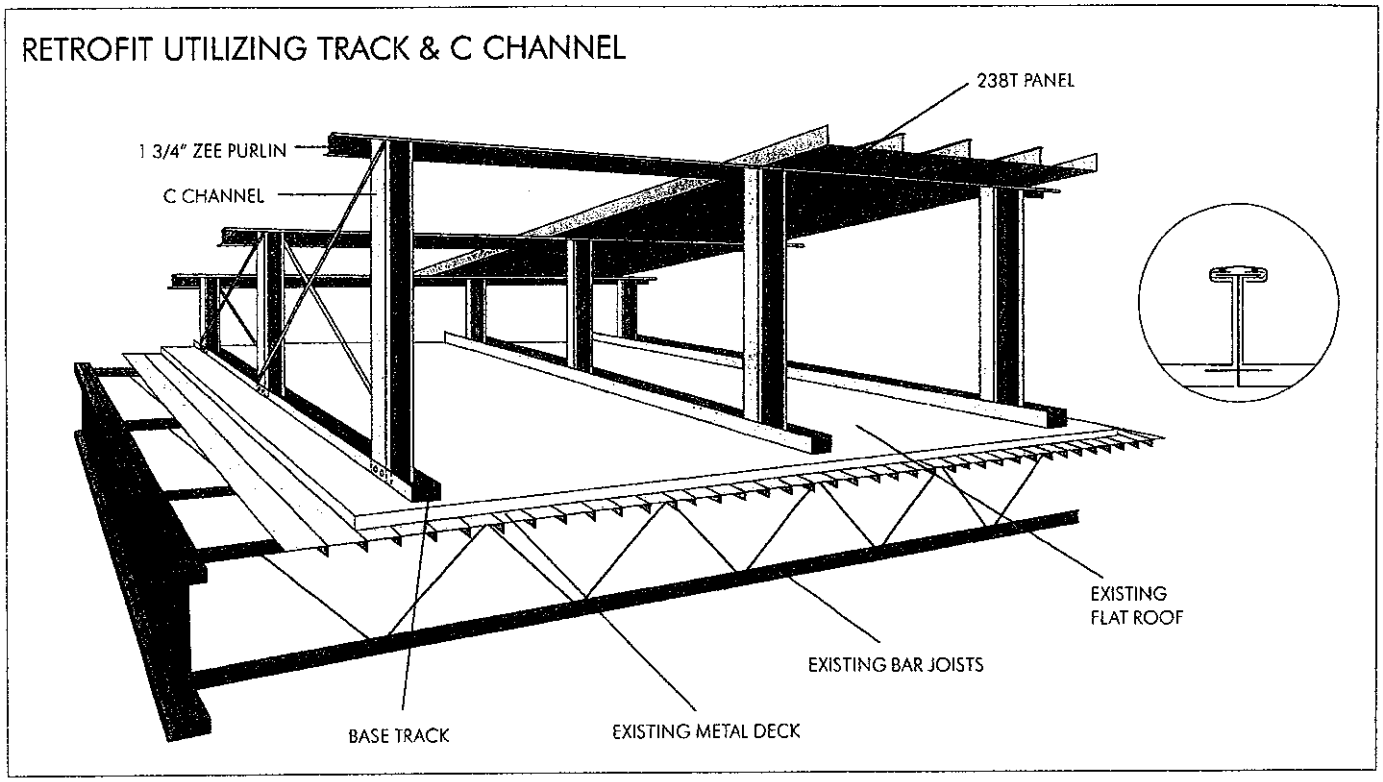

3.2 INSTALLATION OF ROOF PANELS

A. Comply with and install roofing and flashings in accordance with all details shown on manufacturer's approved shop drawings and manufacturer's product data and instructions, within specified erection tolerances.

B. Install field panels in continuous lengths, without endlaps. Remove and replace panels with endlaps.

C. Do not install panels damaged by shipment or handling.

D. Install intermittent clips with bearing plates and continuous clips according to pattern in wind uplift rating at field, corners and perimeter roof areas.

E. Fix panels at location depicted on reviewed shop drawing(s).

F. Breadpan roof panel at ridge, hip and headwalls.

G. Allow for 1 inch panel clearance at penetrations.

H. Install concealed supports, angles and brackets as furnished by manufacturer to form complete assemblies.

I. Remove roof panel and flashing protective film prior to extended exposure to sunlight, heat, and other weather elements.

J. Field-apply sealant tape and gun-grade sealant according to reviewed shop drawings and manufacturer's requirements for airtight, waterproof installation.

K. Ensure sealant beads and tape are applied prior to sheet metal installation to achieve a concealed bead. Neatly trim exposed portions of sealant without damaging roof panel or flashing finish.

L. Align pipe penetrations to occur at center of roof panel. Report and have corrected improperly-placed penetrations before proceeding with panel installation. Remove and replace roof panels which have improperly-placed penetration flashings.

M. Align roof curbs to fit roof panel module and overlap standing seam(s). Allow for proper drainage on both sides of curb.

N. Install sheet metal flashings according to manufacturer's recommendations, reviewed shop drawings and in accordance with provision of Section 07600.

3.3 CLEANING

A. Clean exposed surfaces of Work promptly after completion of installation.

B. Clean mud, dirt, and construction-related debris from panels before panels are scratched or marred.

3.4 PROTECTION

A. Protect Work as required to ensure roofing will be without damage at time of final completion.

B. Do not allow excessive foot traffic over finished surfaces.

C. Do not track mud, dirt, or construction-related debris onto panel surfaces.

D. Replace damaged Work before final completion.

END OF SECTION 07411

07450 MECHANICALLY FASTENED ROOF SYSTEM

I. GENERAL

INTRODUCTION

The following is the information required to install the mechanically fastened roofing system. Each installation shall be in compliance with the manufacturer's recommendations, detail drawings, instructions, material descriptions, and other information stated herein.

REQUIREMENTS

1. The mechanically fastened roofing system shall be the Duro-Last roofing system installed by an authorized Duro-Last contractor or approved equal.

2. A Duro-Last Technical Representative must inspect the Duro-Last roofing system for compliance with the Duro-Last specifications before a commercial/industrial warranty is issued. Note: Duro-Last shall perform destructive testing should a visual inspection necessitate a need for further investigation.

3. All materials used in the installation of the Duro-Last roofing system must be products of Duro-Last, Inc. or accepted products as defined and described in the specification. Other materials must be accepted in writing by the Duro-Last Engineering Services department prior to being used in the Duro-Last roofing system.

4. The Duro-Last contractor is responsible for following all applicable building, plumbing, and electrical codes.

5. Buildings 40-feet (12 m) or taller and/or located within high wind zones (greater than 110 mph [177 km/h]) or special wind regions the following applies:

   a) The Duro-Last Engineering Services Department should be involved in determining the fastening requirements. Typically, the ASCE 7 Specification will be used to determine the fastening requirements. When appropriate, specifications set forth by entities such as FM Global, SPRI or State/Local Agencies will be utilized.
   b) Fastening tab spacing may not exceed 60-inches (1.5 m) on center unless approved, in writing, by the Duro-Last Engineering Services Department.

6. It is the contractor's responsibility to verify the accuracy of information provided to Duro-Last, including but not limited to pull test results, building height, and roof dimensions. Measurements used during the quotation phase of a project must be checked for accuracy by the installing contractor.

TOOLS

The authorized Duro-Last contractor should have all the tools which are necessary for the efficient and proper installation of the Duro-Last roofing system as required by Duro-Last.

MEMBRANE DESCRIPTION

A. The Duro-Last membrane is a polyvinylchloride polymer blend, which is reinforced with a high-strength weft-inserted polyester scrim that has a thread pattern of 18 x 14 threads per inch. Refer to the Spec Data Sheets in the "Product Data Sheets" section for a listing of all of the test results and physical properties of the membrane.

   1. The roofing membrane shall be 50 mil (1.27 mm) thick with a system weight of approximately 0.32 lb/ft^2 (1.56 kg/m^2). The prefabricated roof cover shall be supplied in sections that are either

folded or rolled. Individual sections may be as large as 2,000 ft^2 (186 m^2), with no single dimension exceeding 80-ft (24 m). Deck sheets shall be fabricated up to 2,500 ft^2 (232 m^2) when using 10-ft (3.05 m) laps, 30'-6" (9.3 m) wide with a full reverse, not to exceed 80-ft (24.4 m) long.

APPLICABILITY

The Duro-Last roofing system consists of the Duro-Last membrane, fasteners, prefabricated corners, parapet flashings, stack flashings, curb flashings, two-way vents, and other related Duro-Last approved products. The Duro-Last roofing system consists of products manufactured by Duro-Last, Inc., or accepted products as defined and described in the specifications. Alternate materials must be pre-approved in writing by the Duro-Last Engineering Services Department prior to their use with the Duro-Last roofing system.

DRAINAGE/SLOPE

Duro-Last shall warrant its membrane even where ponding water accumulates. Duro-Last has found no adverse effects on its membrane because of a lack of positive drainage, however, good roofing practices incorporate the use of positive drainage for the safety of the structure. The installing contractor is responsible to make sure roof drainage meets local building code requirements.

WEATHER CONSIDERATIONS

The Duro-Last membrane is designed to perform in all types of weather. The Duro-Last membrane is regularly subjected to DSET, EMMAQUA Exposure and low temperature cracking (ASTM D-2136) testing. Installation of the Duro-Last membrane is limited only by the exposure limitations of the installers. It is Duro-Last's recommendation that installation be performed within the temperature range of –15 to 115 °F (–26 to 46 °C).

DELIVERY

The Duro-Last roofing system and related materials will be delivered to the location designated by the Duro-Last contractor in the original packaging and with shipping labels intact. Containers will be labeled with manufacturers/supplier's name, product name, and identification. Each shipment should be checked for damages and/or shortages at the time of delivery. The freight agent must note damaged materials and/or shortages on the freight bill. Concealed damage must be reported to the freight agent immediately. Materials damaged in shipping, handling, or storage cannot be used.

HANDLING

Once the Duro-Last roofing system is delivered, the contractor and contractor's crew are responsible for all handling and installation of the roofing system. Adequate personnel and equipment should be available to safely lift and place the Duro-Last roofing system onto the rooftop. Folded or rolled prefabricated sections of membrane must be placed on the roof near load-bearing members, and in a manner convenient to final placement.

STORAGE

Duro-Last materials should be kept clean and dry. Materials should be stored on pallets and covered with tarps. Care should be taken to place materials away from areas where water may pond or areas that water falls onto from higher elevations. All sealants must be stored at temperatures above 40 °F (5 °C). Keep combustible materials away from heat, sparks, and open flames. Follow precautions outlined on the containers or supplied by the material manufacturer.

SUBSTRATE SEPARATION

The Duro-Last membrane is defect-free when it leaves the factory. Certain substrates are not compatible with the Duro-Last membrane and may cause premature failure of the membrane. Over the substrates listed below,

install a minimum 3 mil polyethylene or polypropylene slip sheet prior to the installation of the Duro-Last membrane.

The Duro-Last membrane is compatible with the following substrates, and no separation is required.

	Linseed Oil	Copper Sulfate	Lard (Animal Fats)
Latex Paint	Masonry Cleaner	Ferric Chloride	Phosphoric Acid
Fertilizer Solution	Muriatic Acid	Fiberglass Mat	Polypropylene
Fruit Juice	Oleic Acid	Furnace Residue	Zinc Chloride
Hydrogen Peroxide	Sodium Hydroxide	Detergent Solution	Bleach

CHEMICAL RESISTANCE

Duro-Last membrane is resistant to the chemicals listed below. If any other chemicals are present on a particular roof, please contact the Engineering Services Department.

Acrylic Coatings	Extruded Polystyrene	Modified Bitumen	Shingles
Aluminum Coated Asphalt	Granulated Cap Sheet	Old Duro-Last Roofs	TPO (Thermoplastic Polyolefin)
Coated or Smooth Asphalt	Hypalon (CSPE)	Polyurethane	Sprayed Urethane Foam
Expanded Polystyrene	Mineral Surfaced Cap	Coal Tar Pitch	PVC/CPA Membranes
Acrylic Coatings	Extruded Polystyrene	Modified Bitumen	Shingles
Aluminum Coated Asphalt	Granulated Cap Sheet	Old Duro-Last Roofs	TPO (Thermoplastic Polyolefin)
Coated or Smooth Asphalt	Hypalon (CSPE)	Polyurethane	Sprayed Urethane Foam
Expanded Polystyrene	Mineral Surfaced Cap	Coal Tar Pitch	PVC/CPA Membranes

PAINT APPLICATION

The Duro-Last membrane may be painted, although vinyl edging may not be painted. See the Chemical Resistance section for approved paint types for the membrane. If the vinyl edging is painted and causes damage to the edgings, Duro-Last Roofing, Inc. will not be held responsible for repair or replacement under the warranty. Should you have any questions, please contact the Duro-Last Quality Assurance Department.

II. QUALITY ASSURANCE

PRE-JOB INSPECTION

When recovering an existing roofing system, the authorized Duro-Last contractor is responsible to conduct an inspection of the proposed job site roof conditions to determine the needed fastener type and length, evaluate the moisture content of the existing roofing system, and to note damaged areas to be repaired prior to installation of the Duro-Last roofing system.

CORE CUTS

1 The Duro-Last contractor is responsible for performing a series of core cuts to determine and verify the above information. The Duro-Last contractor and/or building owner is responsible for the repair of all core cuts.

2 Duro-Last, Inc. does not approve the practice of roofing over existing roofing systems that contain excess moisture. Excess moisture is defined as water observed within a core cut or water squeezed from the core sample taken.

3 Duro-Last's post-installation warranty inspection does not check the moisture content of the substrate.

PULL OUT TESTS

1 Fastener pullout tests must be conducted on the roof deck with approved fasteners to verify the integrity of the deck and to establish fastening patterns that meet the requirements of Duro-Last specifications. Contact the Duro-Last Engineering Services Department with any questions.

2 It is the responsibility of the Duro-Last contractor to make sure pullout tests are performed on site. The tests can be performed by either the fastener manufacturer or the authorized Duro-Last contractor. The sections of decking where integrity is in question should be the locations for the tests. The pullout tests must be documented on a roof drawing showing the location and pullout value of each test. In situations where new construction prevents on-site pullout tests, a pre-assembled deck representing the proposed deck type should be constructed and tested.

3 The number of pullout tests required will be as follows: perform a minimum of 10 tests for up to 50,000 ft^2 (4,645 m^2) and five additional pull tests for each additional 50,000 ft^2 or portion thereof, on each project. Areas of low pullout results will require additional pullout tests.

4 It is the responsibility of the Duro-Last contractor to verify pullout values prior to installation.

FASTENER SELECTION AND DECK TYPES

The fasteners used to attach insulation, recover board and Duro-Last membrane must be supplied by Duro-Last, Inc. The following tables summarize the appropriate fasteners to use for different deck types and system components. If a fastener type is needed that is not listed below, the Duro-Last Engineering Services Department must approve its use, in writing, prior to installation.

Plate Selection

When determining which plates to use and where to use them, refer to this table.

	2-inch (50 mm) Poly-Plate	2.4-inch (61 mm) Cleat Metal Plate	3-inch (76 mm) Square Metal Plate	Insulation Plate
Membrane Fastening				
Fastening Tabs	Yes	Yes	No*	No
Parapet Flashings	Yes	Yes	Yes	No
Base of Walls/Penetrations	Yes	Yes	Yes	No
Insulation Boards	Yes	Yes	Yes	Yes
Cover Boards	Yes	Yes	Yes	No

FASTENER SELECTION BASED ON DECK TYPE

When determining which fastener type to use for a specific deck type, refer to this table. Note that pullout tests must be performed on each deck and that fastener spacing must be determined based on the "Fastener Spacing Tables" on the following page. If the minimum pullout values required cannot be achieved contact the Duro-Last Engineering Services Department for assistance.

	Fastener Type	**Notes**
Steel	Duro-Last HD Screws Duro-Last XHD Screws	Must penetrate a minimum of 1-inch (25 mm) from the top surface of deck.
Wood	Duro-Last HD Screws Duro-Last XHD Screws	Must penetrate a minimum of 1-inch (25 mm) from the top surface of deck.
Structural Concrete	Duro-Last Concrete Nail	Must penetrate a minimum of 1-inch (25 mm)

	Duro-Last Concrete Screw Duro-Last HD Screws Duro-Last XHD Screws	from the top surface of deck. Pre-drill a minimum of 1/2-inch (12.7 mm) deeper than the required depth of the fasteners using a 3/16-inch (5 mm) bit.
Gypsum	Auger Fastener* Liquid Auger Fastener**	Minimum pullout requirements must be met. See "Fastener Spacing Tables", page 7.
		Pre-drill required for auger fasteners. Use a 7/16– 9/16-inch (11 – 14mm) bit.
		* Must penetrate a minimum of 1-1/2-inch (38 mm) from the top surface of deck. * Factory Mutual designed systems require minimum of 2-inch (50 mm) penetration.
		** Liquid Augers must penetrate a minimum of 2inch (50 mm) from the top surface of the deck.
Cementitious Wood Fiber (Tectum)	Auger Fastener* Liquid Auger Fastener**	Minimum pullout requirements must be met. See "Fastener Spacing Tables", page 7. ***(Do Not Pre-Drill)***
		* Must penetrate a minimum of 1 1/2-inch (38 mm) from the top surface of deck. * Factory Mutual designed systems require minimum of 2-inch (50 mm) penetration.
		** Liquid Auger must penetrate a minimum of 2inch (50 mm) beyond the top surface of the deck.
Light Weight Concrete	Auger Fastener* Liquid Auger Fastener** Duro-Last Concrete Screw Duro-Last Concrete Nail Duro-Last HD Screws	Minimum pullout requirements must be met. See "Fastener Spacing Tables", page 7 Pre-drill required. Augers: Use a 7/16–9/16-inch (11 – 14 mm) bit. Others: Use a 3/16-inch (5 mm) bit.
	Duro-Last XHD Screws	* Must penetrate a minimum of 1-1/2-inch (38 mm) from the top surface of deck. * Factory Mutual designed systems require minimum of 2-inch (50 mm) penetration.
		** Liquid Auger must penetrate a minimum of 2inch (50 mm) from the top surface of the deck.
Walls and Curbs		Notes
Cinder and Concrete Blocks	Zinc Plated Metal Anchors Duro-Last Concrete Screw Duro-Last Concrete Nail Duro-Last HD Screws Duro-Last XHD Screws	Must penetrate a minimum of 1-inch (25 mm) from the top surface. Pre-drill a minimum of 1/2-inch (12.7 mm) deeper than the required depth of the fasteners using a 3/16-inch (5 mm) bit (1/2-inch (12.7 mm) for metal anchors).

FASTENER SPACING TABLE* - FOR USE WITH ALL DECK TYPES

90 psf System Design Table (Field Area Only)	Fastener Pullout Resistance		Fastener Spacing Along Laps					
			120-inch Lap Spacing		60-inch Lap Spacing		28-inch Lap Spacing	
	lb.	N	in.	mm	in.	mm	in.	mm
	450	2000	6	230	12	305	18	455
	375	1670	N.A.		9	230	18	455
	350	1550	N.A.		6	150	18	455
	325	1445	N.A.		6	150	18	455
	300	1330	N.A.		6	150	15	380
	275	1220	N.A.		6	150	15	380
	225	1000	N.A.		6	150	18	455
	210	930	N.A.		N.A.		12	305
	175	780	N.A.		N.A.		9	230
	Less than 175		N.A.		N.A.		N.A.	

60 psf System Design Table (Field Area Only)	Fastener Pullout Resistance		Fastener Spacing Along Laps					
			120-inch Lap Spacing		60-inch Lap Spacing		28-inch Lap Spacing	
	lb.	N	in.	mm	in.	mm	in.	mm
	450	2000	9	230	18	457	24	610
	375	1670	6	230	15	380	18	455
	350	1550	6	150	15	380	18	455
	325	1445	6	150	12	305	18	455
	300	1330	6	150	12	305	18	455
	275	1220	N.A.		12	305	18	455
	225	1000	N.A.		9	230	18	455
	210	930	N.A.		6	150	18	455
	175	780	N.A.		6	150	15	380
	150	665	N.A.		6	150	15	380
	140	620	N.A.		N.A.		12	305
	Less than 140 (620)		N.A.		N.A.		N.A.	

Pullout values greater than 450 lbs can only be used with the Duro-Roof system.

1. For buildings 40-feet (12M) or taller and/or located with-in high wind zones (greater than 110 mph [177 km/h]) or special wind regions;

2. The Duro-Last Engineering Services department should be involved in determining the fastening requirements. The ASCE 7 Specification will be used to determine the fastening requirements. When appropriate, specifications set forth by entities such as FM Global, SPRI or State / Local Agencies will be utilized.

3. Fastening tab spacing may not exceed 60 in. (1.5 m) on center unless approved, in writing, by *the* Duro-Last Engineering Services department.

The tables to the left indicate the membrane fastening within the FIELD AREA only. Membrane attachment on Duro-Last designed roof systems, buildings in special wind regions or those 40feet or taller, and all Factory Mutual-insured buildings will require special field, perimeter, and corner fastening.

The width of the perimeter area is determined by the either the lesser of 40% of the building height at the eaves or 10% of the overall plan width of the building and/or roof area. The perimeter must never be less than five-feet wide.

Contact the Duro-Last Engineering Services department for additional information.

II. IMPLEMENTATION

ROOF PREPARATION

RECOVER – Built-up Roof (BUR)

- ☐ If the BUR is gravel surfaced and the pea gravel or crushed stone is 1/4 - 3/8-inch (6 - 10 mm) in size, it must be leveled and maintained at 4 lb./ft^2 (20 kg/m^2). A minimum 3/8-inch (10 mm) fan fold board, supplied by Duro-Last, approved recover board, or 1-inch (25 mm) thick insulation must be used to overlay the gravel.
- ☐ If the loose stone on an old BUR is vacuumed or swept, A minimum 3/8-inch (10 mm) fan fold board, supplied by Duro-Last, approved recover board, or 1-inch (25 mm) thick insulation must be used to overlay the existing system. CAUTION: Removing more than the loose gravel may affect the fire rating. Contact the Duro-Last Engineering Services Department for assistance regarding fire rated assemblies.
- ☐ If the BUR is a smooth or granular surfaced application, and is free of sharp edges and debris, it can be recovered with a minimum of a 3 mil polyethylene slip sheet, though Duro-Last fan fold board is recommended.
- ☐ EPS insulation cannot be used over coal tar pitch or asphalt without a slip sheet between the coal tar pitch and the insulation as well as between the membrane and the insulation. Duro-Last underlayments are approved for direct application over aged coal tar pitch roofs.
- ☐ When roofing over asphalt or coal tar roofs (including tear-off), an approved separator sheet must be used. Asphalt-based products are incompatible with the Duro-Last roofing membrane. Note: Should the Duro-Last membrane become soiled with roofing asphalt, the affected membrane must be cleaned immediately using approved cleaners and procedures. If the asphalt cannot be properly cleaned from the membrane, the affected membrane must be removed and new membrane installed, or overlay the affected area with an approved slip sheet and new membrane. Extreme caution should be taken if you are doing a tear-off while installing the membrane.

RECOVER – Single Ply Roof (SPR)

- ☐ The existing single-ply roofing membrane must be cut free from the entire roof perimeter, cut free around all penetrations, and cut in between fastener rows prior to the installation of the Duro-Last membrane. When reroofing after a tear-off, caution should be used to prevent the Duro-Last membrane from contacting incompatible materials. (See "Substrate Separation", page 4)
- ☐ If the existing system is mechanically fastened, there is often a problem with loose fasteners. Because of this problem, cut the membrane open and remove all loose fasteners before installing the slip sheet.
- ☐ If a PVC membrane has been installed directly over styrene insulation without a separation sheet, then the old membrane must be removed, damaged insulation replaced, and an approved slip sheet installed.
- ☐ If the existing membrane is ballasted and the Duro-Last membrane is to be mechanically fastened, it is necessary to do fastener pullout tests on the deck. Also, the type of insulation and its density needs to be determined to ensure that the insulation will meet the Duro-Last specification. (See "Substrate Separation", page 4). Be aware that if the existing insulation is "loose-laid" it must be fastened with an approved fastening pattern (See Detail 1020).

NEW CONSTRUCTION

- ☐ All concrete surfaces must be troweled smooth. If the concrete surface is not smooth, a minimum 3/8inch (10 mm) fan fold board, supplied by Duro-Last, is required.
- ☐ The roof deck or existing roof system must be clean, smooth, free of sharp edges, and loose foreign material. Damaged areas and other factors affecting the installation of the Duro-Last roofing system must be repaired prior to the installation of the membrane.
- ☐ A metal deck must be separated from the Duro-Last membrane by at least 7/16-inch (11 mm) hardboard (gypsum, plywood, or oriented strand board) or 1-inch (25 mm) rigid insulation. It is the responsibility of the contractor to ensure that the selected insulation is adequate to span the flutes of

the deck. If it is not, the flutes must be filled with an approved insulation. See "Insulation Selection and Installation" for further details.

- All plywood surfaces must be smooth and free of all foreign material. Gaps between sheets of plywood should not exceed 1/4-inch (6 mm). Prior to the installation of the membrane a slip sheet such as geotextile, 3-mil polyethylene film or duct tape must be installed over any H-clips if they are used on any plywood decking.

INSTALLATION

WOOD NAILER

Wood nailers must be a #2 grade lumber, or better and must be fastened to the deck, wall or existing secured nailer in such a manner that they resist 180 lb. of force per linear foot (2,643 N/M) of nailer in any direction.Fasteners used to attach wood nailers must be spaced no greater than 18-inches (455 mm) apart. Wood nailers are required in any situation where 1-inch (25 mm) or greater of insulation is added to the roof perimeter edge.The top of the nailers must be flush with the top of the insulation. Wood nailers are not required at a change of plane such as the intersection between a parapet wall and the decking.

Duro-Last Engineering Services requires that for nailers and other lumber supports identified as ACQ or CA treated, only stainless steel fasteners be used. Additionally, for all new construction, untreated lumber should be used for nailers with standard e-coated fasteners. Further, treated lumber dating 2003 or earlier is acceptable for use with e-coated fasteners as lumber prior to 2003 of age is unlikely to contain the copper based treatments.

INSULATION SELECTION AND INSTALLATION

Insulation products must be neatly fitted to the roof deck and its penetrations. 4 x 8-feet (1.2 x 2.4 m) Insulation boards must have a minimum of five fasteners/distribution plates installed per board. No gap should exceed 1/4inch(6 mm) in width. No more insulation products should be installed than can be covered with membrane and completed before the end of the day's work or before the onset of inclement weather. Duro-Last fasteners and Duro-Last plates as well as approved fastening patterns are required for attachment of all insulation products.

The minimum compression characteristics of insulation products as determined by ASTM D-1621 will be as follows:

- Extruded polystyrene products: 25 psi (172.3 kPa)
- Polyisocyanurate products: 20 psi (137.8 kPa)
- Fiberglass products: 16 psi (110.3 kPa)
- Expanded polystyrene products: 15 psi (124.1 kPa) and 1.5 pcf (24 kg/m^3) density (certified) and a minimum 1-inch (25 mm) thick.
- Expanded polystyrene products covered with or laminated to a hardboard facer: 12 psi (82.7 kPa) and
  1.25 pcf (20 kg/m3) densities and a minimum of 1-inch (25 mm) thick.

PERIMETER MEMBRANE INSTALLATION

- The first fastening tab on all perimeter roof sections that have tabs parallel with the roof edge or parapet wall, must be between 24 - 36 inches (610 - 915 mm) from the edge or the wall. If the parapet wall is greater than 24-inches (610 mm) tall, the perimeter tab may be placed up to 63-inches (1.6 m) away from the roof edge when utilizing roof sections with maximum lap spacing of 60-inches (1.5 m) on center.Polyisocyanurate products: 20 psi (137.8 kPa)
- When using roof sections with fastening tabs spaced 120-inches (3 m), the first tab along <u>all</u> perimeter roof edges must be located 24 - 36-inches (610 – 915 mm) from the edge. The second tab must be placed 84 - 96-inches (2130 – 2440 mm) from the edge. Parapet wall height does not change this requirement.

- On buildings with multiple roof levels, treat all roof edges as perimeter edges if they stand 3-feet (915 mm) or more above adjacent or surrounding roof areas.
- On buildings located in high wind zones (greater than 110 mph [177 km/h]) or on structures that are 40feet (12 m) or taller, additional wind tabs and/or increased fastener density may be required. Contact the Duro-Last Engineering Services department for assistance.

MEMBRANE INSTALLATION

- The prefabricated roof section is unrolled and positioned on the deck to expose the first securement tab. The securement tab is mechanically fastened to the deck with approved fasteners and stress distribution plates (see "Fastener Selection and Deck Types", page 6). The roof section is then unfolded and pulled taut to remove any wrinkles exposing the second securement tab. This process is repeated until the entire roof section has been mechanically fastened to the deck, including all securement tabs and edges. The next section of roofing membrane is then positioned to provide a minimum 6-inches (152 mm) overlap. The above procedure is repeated for each roof section.
- The edge of the stress distribution plate must be installed flush with the outside edge of a fastening tab.
- The maximum fastener spacing is 18-inches (457 mm) on center in rows 60-inches (1.5 m) apart. For tab spacing greater than 60-inches (1.5 m), the maximum fastener spacing is 12-inches (305 mm) on center. (Refer to the Fastener Spacing Table, page 7.)
- When installing membrane, ensure that the appropriate side of the membrane is exposed to elements. For white and gray membrane, the smooth side should be exposed. On the tan membrane, it will be the embossed side of the membrane that should be exposed.
- If the membrane is attached to the support structure beneath the roof deck, special precautions must be taken. If the membrane is attached to a steel purlin structure, all fasteners must penetrate a minimum of 1-3/4-inch (44 mm) from the top of the purlin using Duro-Last purlin fasteners. If the membrane is being attached to a wood truss structure, all fasteners must penetrate a minimum of 1-inch (25 mm) from the top surface of the truss with approved Duro-Last fasteners.

HOT-AIR WELDING

- Position the membrane so that the top membrane overlaps the bottom membrane a minimum of 6-inches (152 mm). Ensure the welding area is dry, clean and free of foreign material.The edge of the stress distribution plate must be installed flush with the outside edge of a fastening tab.
- Weld the top membrane to the bottom membrane using a hand-held welder or an automatic welding machine, and silicone roller. A minimum 1-1/2-inch (38 mm) wide continuous weld is required.
- All field-welded seams must be inspected with a tack claw or similar tool (cotter key extractor), and all deficiencies repaired prior to inspection by Duro-Last.

FLASHINGS

- The Duro-Last membrane must not contact surfaces which maintain or exceed temperatures of 120 °F including all insulated chimney pipes, exhaust pipes, and combustible fuel pipes.
- All flashings must be terminated at a minimum of 8-inches (203 mm) above the roof surface.
- See "Mechanically Fastened" details section for installation references.

TWO WAY AIR VENT

a. Install Duro-Last Two-Way Air Vents following these guidelines:

   ☐ Install at a rate of one vent for every 1,000 ft^2 of deck area.

- ☐ Do not install the vents near drains or in valleys.
- ☐ Evenly space the vents across the roof area and center them between fastening tabs.

b. It is the contractor's responsibility to ensure that adequate secondary drainage exists to prevent flooding during extreme weather when water could infiltrate the two-way vent.

c. See Details 5020 for installation references.

ROOF DRAINS AND SCUPPERS

a. Drain Assemblies with Clamping Rings.
   1. All existing roofing materials must be removed from drain bowl and clamping ring.
   2. Use Duro-Caulk Plus between the membrane and clamping ring (1/2 tube minimum).
   3. After the Duro-Last membrane is properly installed onto the bowl and the clamping ring set in place, all bolts securing the ring must be installed to provide constant, even compression on the sealant. If bolts are broken or missing, replacements must be installed.

b. Duro-Last Drain Boots
   - ☐ If the Duro-Last drain boot is to be used, apply one-half (1/2) tube of sealant minimum to the outside of the drain boot and insert into the drain.
   - ☐ Install composite compression drain rings as low into the drain as possible.

c. See Details 2011, 2020, 2021, 2025, 2030, 2041, 2050, 2060, 2061, 2070 and 2071 for installation references

EXPANSION JOINTS

a. See Details 1140, 1150, 1160, 1170 and 6160 for installation references.

PITCH PANS

- ☐ Use pitch pans only when standard Duro-Last flashings cannot be used.
- ☐ Only Duro-Last Duro-Caulk Plus or approved sealer may be used when creating a pitch pan.
- ☐ See Details 4030, 4040 and 4045 for installation references.

WALKWAY PADS

a. Duro-Last Roof Trak® III Walkway Pad is recommended at all roof access points, service units and high traffic areas. The risk of potential third party damage to the Duro-Last roofing system may increase should the building owner choose not to utilize the Duro-Last Roof Trak III Walkway Pad. Note: Prior to inspection of the installation by Duro-Last, attach only one side of any Walkway Pads that will be covering any field seams. This will allow the Duro-Last Technical Representative to inspect the entire field seam. After the inspection, hot-air weld the remaining side to complete the attachment of the pad.

CAUTIONS AND WARNINGS

1. Duro-Last Roofing, Inc. is not responsible for damage that may occur as a result of moisture created from condensation occurring within or beneath a roof deck subassembly or building.

2. All Polystyrene insulation (Styrofoam, Formular, Dow, EPS, etc. - blue, white, gray, green, or pink) must have <u>an approved non-styrene facer</u> or a 3 mil polyethylene slip sheet covering when installed in direct contact with existing or new PVC membranes. Polyethylene or polypropylene facers are acceptable only after testing, and approval by Duro-Last for compatibility.

3. Phenolic foam is not an approved insulation in new construction or re-roofing applications. The Duro-Last roofing system may not, under any circumstance, be installed over phenolic foam.

4. Perlite and wood/mineral fiber-boards are not acceptable substrates for the Duro-Last membrane. (See #5 below for exception on wood fiber board)

5. High density wood fiber boards are only acceptable on a metal roof that is being retrofitted where the slope of the roof will be 1-inch (25.4 mm) per 12-inch (305 mm) slope or greater.

6. If asbestos is encountered, the building owner must be notified at once. The owner is solely responsible for determining the proper course of action.

7. A Duro-Last roof shall not be installed over areas of roofs if one or more of the following conditions exist:

   - ☐ The building structure is not sufficient to handle the load of the completed system.
   - ☐ It is not possible to find an approved fastener that will properly hold in the substrate.
   - ☐ Roofs are subject to hot embers, slag, or burning debris.
   - ☐ Incompatible chemicals exhausted directly onto the roof or may come in contact with the roof in liquid form. (See "Chemical Resistance", page 4)
   - ☐ Steam is exhausted directly onto the roof that is in excess of 120° F (49° C).

END OF SECTION 07450

DURO-LAST, INC.
525 Morley Drive
Saginaw, MI 48601

DETAIL 9500

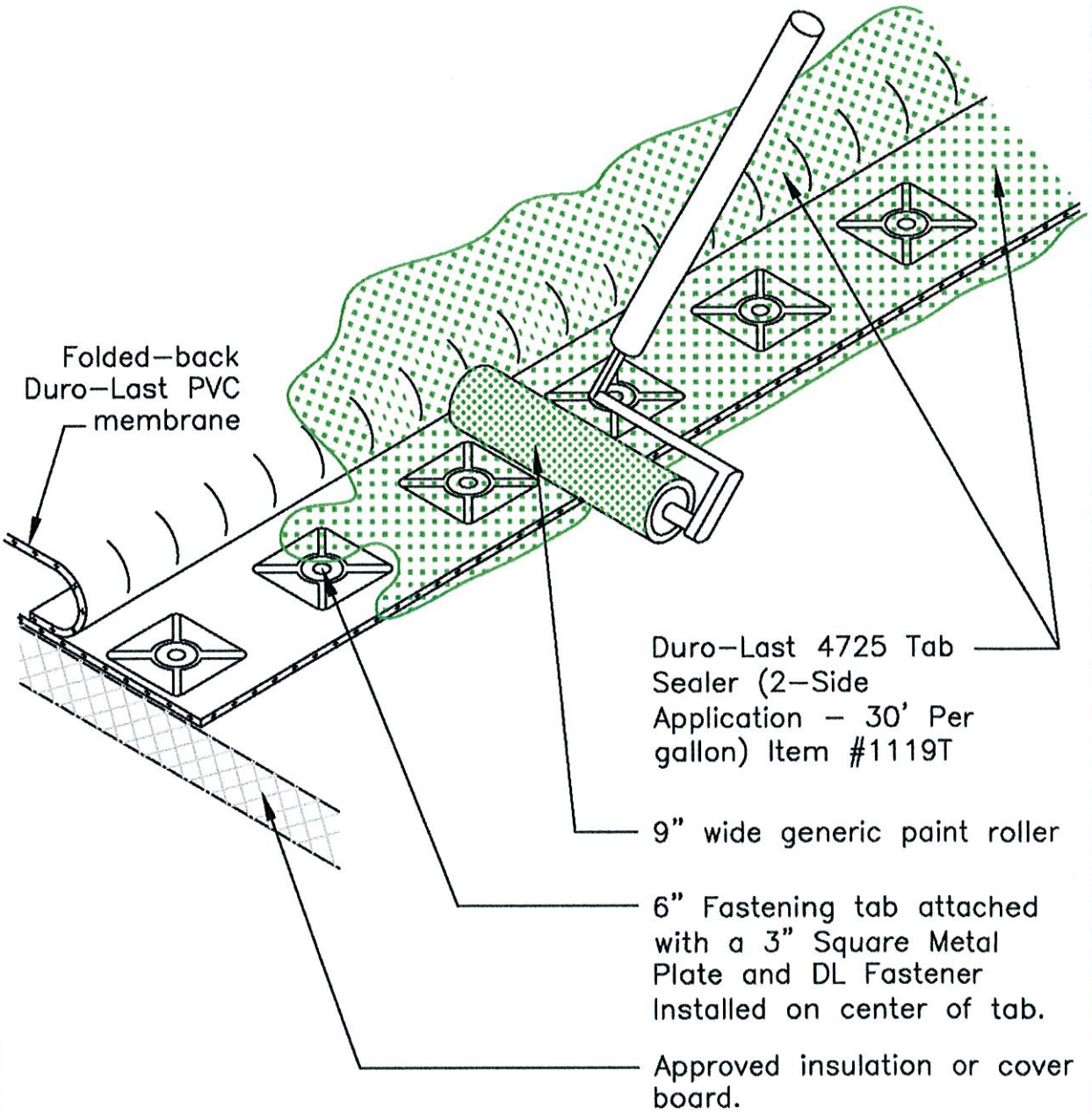

© COPYRIGHT 2009

DATE: JANUARY 2009	DURO-ROOF SYSTEMS
DRAWN BY: ENG. DEPT.	ADHESIVE APPLICATION
SCALE: NONE	NEW CONSTRUCTION OR RE-ROOF

DETAIL 9510

DURO-LAST, INC.
525 Morley Drive
Saginaw, MI 48601

Take extra care not to place tab sealer where field welds will occur.

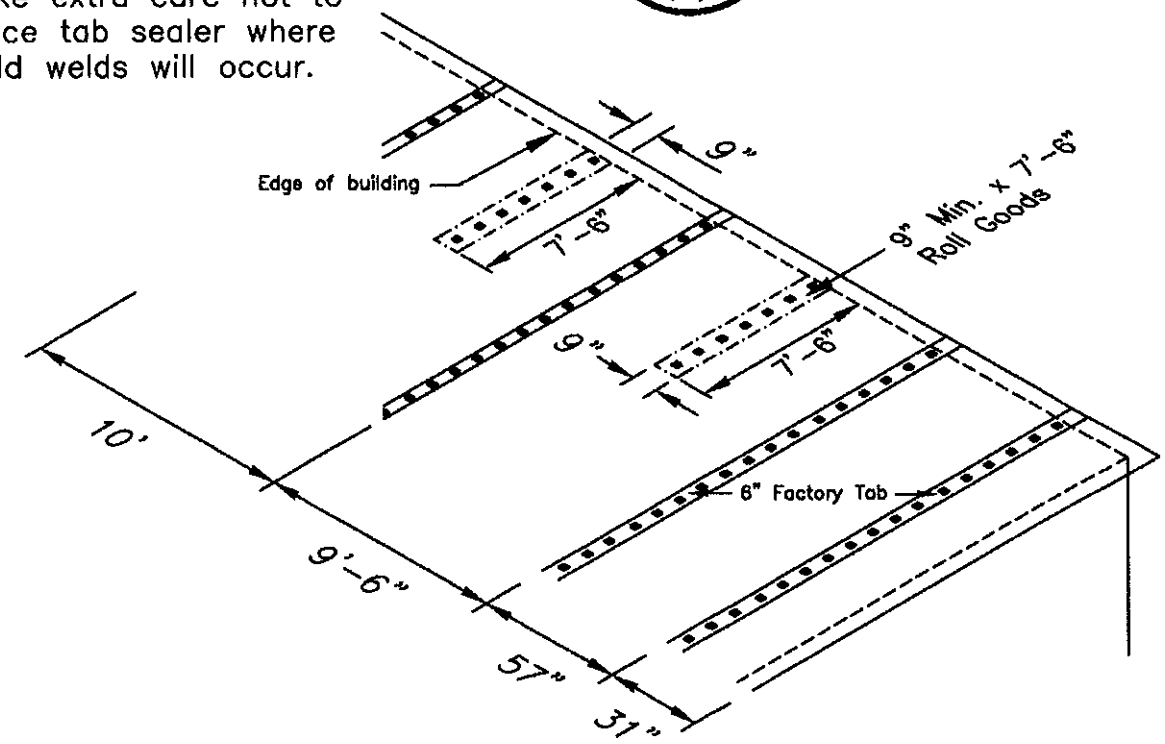

Note 1: Mechanically fasten 3" square metal plates with a Duro–Last fastener along the center of the roll goods, 9–inch wide minimum. Fastener frequency will be determined by the pull resistance charts for the "Duro–Roof" System.

Note 2: Position the deck sheet to its location to begin attaching according to the "Duro–Roof" specifications.

Note 3: Apply the tab sealer over the mechanically attached roll goods and the bottom side of the deck sheet where the roll good will come into contact with the backside of the deck sheet.

Note 4: Smooth the membrane into the roll goods, being sure to remove all air pockets. Continue this process for each additional strip of roll goods installed.

Note 5: This is used only where the fastening tabs of the deck sheet run perpendicular to a roof edge.

DATE: JANUARY 2009	DURO-ROOF SYSTEM
DRAWN BY: ENG. DEPT.	OPTION FOR PERIMETER (10' LAPS)
SCALE: NONE	NEW CONSTRUCTION OR RE-ROOF

© COPYRIGHT 2008

07600 FLASHING AND SHEET METAL

Fabricated Sheet Metal. General:

Conform to profiles and sizes shown, and comply with "Architectural Sheet Metal Manual" by SMACNA, for each general category of work required.

Gravel stops, fascias and trim.

Zinc-Coated Steel Sheet: ASTM A 526, 0.20% copper, 26 gage (0.0179"); ASTM A 525, designation G90 hot-dip galvanized, mill phosphatized.

Fabricate sheet metal with flat-lock seams; solder with type solder and flux recommended by manufacturer, except seal aluminum seams with epoxy metal seam cement and, where required for strength, rivet seams and joints.

Coat back-side of fabricated sheet metal with 15-mil sulfur-free bituminous coating, FS TT-C-494, or SSPC-Paint 12, where required to separate metals from corrosive substrates including cementitious materials, wood or other absorbent materials; or provide other permanent separation.

Provide for thermal exansion of running sheet metal work, by overlaps or expansion joints in fabricated work. Where required for water-tight construction, provide hooked flanges filled with polyisobutylene mastic for 1" embedment of flanges. Space joints at intervals of not more than 50' for steel, 24' for copper or stainless steel, or 30' for zinc alloy or aluminum. Conceal expansion provisions where possible.

Installation Requirements:

Anchor work in place with noncorrosive fasteners, adhesives, setting compounds, tapes and other materials and devices as recommended by manufacturer of each material or system. Provide for thermal expansion and building movements. Comply with recommendations of "Architectural Sheet Metal Manual" by SMACNA.

Seal moving joints in metal work with elastomeric sealants, complying with FS SS-T-00227, -00230, or -001543.

Clean metal surfaces of soldering flux and other substances which could cause corrosion.

Nail flanges of expansion joint units to substrates at spacing of 6" o.c.

Performance: Water-tight/weatherproof performance of flashing and sheet metal work is required.

Base Flashing: Provide 30# felt base flashing at all building perimeter walls a minimum of 6" above the finished floor.

END OF SECTION 07600

07700 EXPANSION JOINT COVERS

SYSTEM DESCRIPTION

A. Joint covers shall permit unrestrained movement of the joint without disengagement of the cover. Joint covers must conform to the requirements of ASTM E1399.
B. Allowable load on floor joint cover plate shall be 100 psf uniform load and 1,000 concentrated load.
C. Fire rated joint cover systems shall have been tested by and shall be listed with an independent, nationally recognized testing and listing entity. Fire resistant joint covers shall be rated for 2 hours.

MATERIALS

A. Expansion joint cover systems
For Exterior Walls:
Balco, Inc. 6000 Series; 6TW-1, 6TWFC
1. Aluminum:
   a. ASTM B221, alloy 6063-T5 for extrusions
   b. ASTM B209, alloy 6061-T6 for plate
   c. ASTM B209, alloy 5052-H32 for sheet

For Interior Walls:
Balco, Inc. 7500 Series; 75FWP, 75FWPE
2. Aluminum: ASTM B221, alloy 6063-T5 for extrusions
3. Face Seals:
   a. Shall be extruded TPR
   b. Shall have a flat top surface
   c. Installed in exterior conditions shall be UV resistant
   d. Shall be Colorable extruded wall and ceiling joint cover system face seals
4. Abrasive: Two (2) part Epoxy combined with aluminum oxide grit.
5. Water Barrier: Flexible EPDM, Class I, ASTM D4637, 45 mils thick (minimum) sheet
6. Fire Barrier:
   Metaflex Classic tested in accordance with ASTM E119/ASTM E814, *
   *including hose stream test, where applicable, at the full rated period
7. Fasteners, accessories, sealant and other materials required for complete installation in accordance with the manufacturer's written installation instructions.

07900 JOINT SEALERS

MATERIALS:

General:

Colors: Manufacturer's standard highest-performance color; except "black" where exposed to view, unless another color is indicated or selected by Architect.

Compatibility: Provide materials selected for compatibility with each other and with substrates in each joint system; confirm with manufacturer.

General Characteristics: Provide type, grade, class, hardness and similar characteristics of material as indicated or, where not indicated, to comply with manufacturer's recommendations relative to exposures, traffic, weather conditions and other factors of the Joint system for best possible overall performance. Except as otherwise indicated, joint sealers are required to permanently maintain airtight and waterproof seals, without failures in joint movement accommodation, cohesion, adhesion (where applicable), migration, staining, and other performances as specified.

Multi-Component Polyurethane Sealant: ASTM C 920 Type M Class 25, or FS TT-5-00227E Class A; self-leveling, except nonsag where joints are not horizontal.

Provide sealant at wood base inside exterior walls, all frames of windows and doors in exterior walls and electrical boxes.

Non-Elastomeric Sealants and Caulking Compounds:

Single-Component Acrylic Sealant: ASTM C 920 Type 5 Class 12.5 Grade NS or FS TT-5-00230 Class B Type Non-sag; solvent based, solids 95% acrylic.

Joint Fillers and Sealant Backers:

Sealant Backer Rod: Non-absorptive closed-cell (or jacketed open cell) compressible/flexible plastic or rubber rod stock which is compatible with sealant (polyethylene, butyl, neoprene, polyurethane, PVC).

INSTALLATION:

Clean Joint Surfaces and prime or seal as recommended by sealant manufacturer.

Support sealants from back with construction as shown, or with joint filler, or with back rod.

Install sealants to size and shape shown or, if not shown, with "hour-glass" section profile as follows:

Pavement/Sidewalk Traffic Joints: Depth equal to 75% of normal joint width, but not more than 3/4" and not less than 3/8".

Non-Elastomeric Sealants, Non-Traffic Joints: Depth in range of 75% to 125% of normal joint width.

Install liquid sealants by proven methods which will ensure complete "wetting" of joint bond surfaces, without gaps or air pockets in beads, slightly concave on surface and slightly below adjoining surfaces, except form slight cove with sealant at inverted corner joints.

END OF SECTION 07900
END OF DIVISION 7

DIVISION 8 DOORS, WINDOWS AND GLASS

08110 STEEL DOORS AND FRAMES

MATERIALS

Standards: In addition to other specified requirements, comply with steel door Institute "Recommended Specification for Standard Steel Doors and Frames" (SDI-100), for the following classifications:

Interior Doors: SDI-100, Grade III, heavy-duty, Model 1, minimum 18 gage faces.

Exterior Doors: SDI-100, Grade III, extra heavy-duty, Model 2, minimum 16gage faces.

Submittals: With maunfacturer's standard details and specifications for steel doors and frames, submit shop drawings showing application to project, as required.

Manufacturer: One of the Following:

Allied Steel Products, Inc.
Amweld Bldg. Products, Div.
Ceco Corp.
Curries Mfg. Div.
Dittco Mfg. Div.
Fenestra Corp.
Steelcraft Mfg. Co.
Trussbilt, Inc.
Republic Builders Products Corp./Subs. Republic Steel.

Fire-rated Assemblies: Provide units that display appropriate UL or FM labels for fire-rating indicated.

Materials: Steel doors and frames; hot-rolled, pickled and oiled per ASTM A 569 and A 568; cold-rolled per ASTM A 366 and A 568.

Anchors and Accessories: Manufacturer's standard units. Use galvanized items for units built into exterior walls, complying with ASTM A 153.

Fabrication: Fabricate units to be rigid, neat in appearance, and free from defects, warp or buckle. Weld exposed joints continuously, grind, dress, and make smooth, flush and invisible.

Prepare doors and frames to receive mortised and concealed finish hardware, including cutouts, drilling and taping, complying with ANSI A 115 "Spedifications for Door and Frame Preparation and Hardware".

Reinforce units to receife surface-applied finish hardware to be field applied.

Locate finish hardware as indicated or, if not indicated, per DHI "Recommended Locations for Builder's Hardware".

Shop Paint exposed surfaces of doors and frame units, including galvanized surfaces, using manufacturer's standard baked-on rust-inhibitive primer.

Doors: Comply with SDI-100, of the types and styles indicated, for materials quality, metal gages, and construction details.

Frames: Comply with SDI-100, of the types and styles indicated, for materials quality, metal gages, and construction details.

Provide standard hollow metal frames for doors, transoms, sidelights, borrowed lights, and other openings as indicated.

Prepare frames to receive 2 silencers on strike jambs of single-swing frames and on heads of double-swing frames.

Provide 26 ga. steel plaster guards or mortar boxes, welded to frame, at back of hardware cutouts where installed in concrete, masonry or plaster openings.

Protect inside faces of frames in plaster or masonry wall construction which are placed with anti-freeze additives, using high-build fibered asphalt emulsion coating.

Installation: Install hollow-metal units in accordance with manufacturer's instructions and final shop drawings (if any). Fit doors to frames and floors with clearances specified in SDI-100.

Install fire-rated units in accordance with NFPA Std. No. 80.

Finish hardware is specified in a another Division-8 section.

END OF SECTION 08110

08210 DOORS

MATERIALS

Standards: Comply with requirements of ANSI/NWMA I.S. 1 and Section 1300 of AWI "Architectural Woodwork Quality Standards" except as otherwise indicated.

Submittals: In addition to product data, submit the following:

Shop drawings indicates location, size, face materials, core construction, fire-ratings (if any), finishes, and elevations for each door required.

Samples for each type of door construction, face material and finish required.

Product warranty on door manufacturer's standard form, signed by Manufacturer, Installer and Contractor, agreeing to repair or replace defective doors as defined by referenced standards. Warranty shall be in effect during following periods of time after date of substantial completion.

Hollow Core Flush Interior Doors: One year.

Insulated Steel Exterior Doors: One year.

Manufacturers: Subject to the compliance with requirements, provide doors by one of the following:

Algoma Hardwoods Inc.
Buell Door Company.
Cal-Wood Door Div.; Timberland Ind., Inc.
Eggers.
Glen-Mar Door Mfg. Co.
Graham Mfg. Co.
Ipik Door Co., Inc.
Weyerhauser Company.
Castlegate Division; USG Industries, Inc.
Benchmark; General products company, inc.
Stanley Door Systems Div.; The Stanley works

GENERAL REQUIREMENTS

Exposed Surfaces: Same exposed surface material on both faces of each door, except as otherwise indicated.

Exterior Insulated Steel Doors:

Embossed solid core construction, 1 3/4" thick, completely filled with 2- to 2.5-pcf density foamed polyurethane insulation, enclosed by steel stiles with rigid vinyl thermal break and solid wood rails. Skins of nominal 24ga. galvanized steel with flanged returns top and bottom edges, thermal-break lock seam on stiles.

Hollow Core Flush Doors for Opaque Finish:

Face: Any closed-grain hardwood of mill option.

Grade: Custom.

Construction: SHC (Standard hollow core).

Prefitting and Preparation for Hardware:

Prefit and premachine wood doors at factory. Coordinate with builders hardware and door frame requirements.

INSTALLATION

Job-Fit Doors: Fit doors to frames with uniform clearances and bevels to dimensions indicated in referenced standards. Machine doors for hardware indicated. Seal cut surfaces after fitting and machining.

Install doors to comply with manufacturer's instructions. Contractor may provide pre-hung door units for both wood doors and insulated steel doors at his option.

END OF SECTION 08210

08410 ALUMINUM STORE FRONTS

GENERAL

Description: Work included: Furnish all necessary materials. labor and equipment for the complete installation of aluminum framing and swing doors as shown on the drawings and specified herein. Related wort< specified elsewhere: (specifier list, Section 8710).

QUALITY ASSURANCE:

Whenever substitute products are to be considered. supporting technical lit., samples, drawings and performance data must be submitted ten (10) days prior to bid in order to make a valid comparison to the products involved. Test reports must be made available upon request.

WINDOW TYPE:

Manufacturer: Kawneer
Frames: Core 1 3/4- x 4-1/2", Trifab 450
Doors: 350 Series Medium Stile 500 Series Wide Stile

PERFORMANCE REQUIREMENTS FOR WINDOWS:

Air infiltration shall be tested in accordance with ASTM E 283. Infiltration shall not exceed .06 CFM per square foot (.0003 m3/ s-m2) of fixed area.

Water infiltration shall be tested in accordance with ASTM E 331. No water penetration at a test pressure of 9 P.S.F. (432 Pa.)

Structural performance shall be based on:
1. Max. deflection of 1/175 of the span
2. Allowable stress with a safety factor of 1.65

The system shall perform to these criteria under a windload of 20 PSF.

PERFORMANCE REQUIREMENTS FOR DOORS :

Structural: Resistance to corner racking shall be tested by the Dual Moment load test as follows:

A. Test section shall consist of a standard top door comer assembly. Side rail section shall be 24" long and top rail section shall be 12" long.
B. Anchor "top rail" positively to test bench so that corner protrudes 3" beyond bench edge.
C. Anchor a lever arm positively to "side rail" at a point 19" from inside edge of "top rail". Attach weight support pad at a point 19" from inner edge of "side rail".
D. Test section shall withstand a load of 270 pounds on the lever arm before reaching the point of failure, which shall be considered a rotation of the lever arm in excess of 45 deg.

Air infiltration shall be tested in accordance with ASTM E283, at a pressure differential of 1.567 P.S.F. [75 Pa). A single 3'0" x 7'0" entrance door and frame shall not exceed .50 CFM per linear foot of perimeter crack. A pair of 6'0" x 7'0" entrance doors and frame shall not exceed 1.0 CFM per linear foot of perimeter crack.

MATERIALS:

Extrusions shall be 6063-TS alloy and temper (ASTM 8 221 alloy G.S. IOA-T5). Fasteners, where exposed, shall be aluminum, stainless steel or plated steel in accordance with ASTM A 164. Perimeter anchors shall be aluminum or steel, providing the steel is properly isolated from the aluminum. Glazing gaskets shall be elastomeric extrusions.

Glazing gaskets for doors shall be EPDM elastomeric extrusions. Major portions of the door stiles shall be .125" [3.2] in thickness and glazing molding shall be .050" [1.2) thick.

FINISH:

All exposed framing surfaces shall be free of scratches and other serious blemishes.
Aluminum moldings shall be given a caustic etch followed by an anodic oxide treatment to obtain an Architectural Class II clear anodic coating conforming to aluminum Association Standard AA-M12 C22 A42 (Dark Bronze)

FABRICATION:

Windows: Framing Members shall have a 2-1/4", with perimeter members 1-3/4", face dimension. Overall depth shall be 4-1/ 2" Coupling mullions shall utilize the "Seaming Mullion" Design which conceals the exterior seam joint between male and female halves. All members shall be utilizing screw joinery.

Doors: The door stile and the rail face dimensions of the Aluminum doors will be as follows:

Door	Vertical Stile	Top Rail	Bottom Rail
350	3-1/2"	3-1/2"	6-1/2"
500	5"	5"	10"

Corner construction shall consist of mechanical clip fastening, SIGMA deep penetration and fillet welds. Glazing stops shall be snap in type with EPDM glazing gaskets.

The door weathering on a single acting offset pivot or butt hung door and frame (single or pair] shall be Kawneer SEALAIR weathering. It is a thermoplastic elastomer weathering in a tubular shape with a semi-rigid polymeric backing. Optional,
the door bottom rail will be weathered with an EPDM blade gasket sweep strip applied with concealed fasteners.

INSTALLATION:

All glass framing and items under this heading shall be set in correct location as shown in the details and shall be level, square, plumb and in alignment with other work in accordance with the manufacture's installation instructions and approved shop drawings. All joints between framing and building structure shall be sealed in order to secure a watertight installation.

PROTECTION AND CLEANING:

After installation, the General Contractor shall adequately protect exposed portions of aluminum surfaces from damage by grinding and polishing compounds, plaster, lime, acid, cement, or other contaminants. The General Contractor shall be responsible for final cleaning.

END OF SECTION

08710 FINISH HARDWARE

SCOPE

This section is one of material supply only and shall include finish hardware as may be described herein or may be required to make a complete and workable job. The general contractor will include installation costs for finish hardware in his contract.

GENERAL

A. Installation of finish hardware is in Section 06100. Hardware shall be fitted prior to the painting and then removed. After painting is completed, final installation of the hardware shall be made.

B. Finish hardware must be neatly and properly installed in accordance with the best practices as approved by the Architect. All hardware must be thoroughly clean when it is turned over to the owner.

C. No extra cost will be allowed because of changes or corrections necessary to facilitate the proper installation of any hardware. The general contractor shall be responsible for the proper fabrication of all work or materials to receive the hardware.

D. Any required hardware not specifically mentioned herein shall be called to the attention of the Architect during the bidding period so that an addendum may be prepared to cover such items. It shall be the responsibility of the successful bidder to furnish all required finish hardware, whether herein specified or not, unless excluded from this section of the specifications.

E. All door hardware installation shall meet State Purchasing and General Services Commission, Building and Property Services Division, Handicap Barriers and Standards Provisions including mounting heights, door opening force, type, shape, function, etc.

F. All hardware for fire rated doors (see door schedule) shall be rated hardware for fire rated assemblies

G. First line quality products of the following manufacturers are approved:

Locksets: Must be keyed to Master key system.
Closers: Yale, Russwin, Corbin, LCN, Sargent.
Exit Devises: Von Duprin, Yale, Sargent
Hinges: McKinney, Hager, Stanley, Lawrence.
Cylinders: Must be keyed to Master system.

QUALIFICATIONS

<u>THE FINISH HARDWARE SUPPLIER SHALL BE A PERSON OR FIRM TECHNICALLY PROFICIENT AND EXPERIENCED IN THIS TRADE AND SHALL BE RESPONSIBLE FOR PROPERLY DETAILING, SUPPLYING AND FITTING MATERIALS TO THE CONDITIONS REQUIRED BY THE DRAWINGS AND APPLICABLE CODES.</u>

GUARANTEE

All goods furnished under this section of the specifications shall be guaranteed free of defects of material and workmanship and shall perform the services for which they are intended for a period of one year (door closers 5 years) after completion of the job. Any item failing to fulfill the guarantee shall be replaced, repaired, and adjusted to the complete satisfaction of the Architect at no further expense to said owner.

FINISH HARDWARE SCHEDULE SUBMITTAL

A. The successful bidder shall submit six (6) copies of the finish hardware schedule to the Owner's Inspector for review.

B. The schedule shall be complete in every detail listing all items of hardware needed for its intended use.

C. All items of hardware shall be correlated with the drawings by group heading numbers andlor item numbers.

D. The hardware supplier shall not order or furnish any templates, hardware, or schedules to anyone prior to the review of the schedule by the Architect.

E. A complete line of physical samples, properly identified, shall be submitted upon request of the Architect.

F. If any door is omitted from the schedule, it shall be trimmed as doors in similar openings.

TEMPLATES

The hardware vendor shall be responsible to the general contractor for the procurements and expediting of the templates required for all items that are included in his schedule.

FINISHES

All exposed hardware, unless otherwise noted, shall be dull chrome (US26D) finish except door closer covers and exit device mullions which shall be sprayed enamel to match exit devices. Exit devices may be brushed stainless steel.

FASTENINGS

Hardware furnished under this section of the specifications shall be complete with all necessary screws, bolts, anchors, or other fastenings for proper application. Such fastenings shall be of suitable size and type and shall harmonize with hardware as to material and finish. Stops and holders shall be fastened to concrete with machine screws and tamp-in shields and to doors with sex bolts.

LEVERS AND TRIM

A. Levers shall be cast with clutch type screwless shank. Adjusting hub to be held in alignment with knob to prevent hub (nut) from loosening knob attachment whent he thimble is tightened. Tightening or loosening of thimble shall be by special spanner wrench. Furnish three such spanner wrenches.

B. Roses shall be cast clamp-type screwless.

C. Cast lever trim shall be similar to Falcon,"T" Series – "Dane" to meet requirements of "ADA" (wrought levers are not acceptable). These shall be detent retained with the outer detent inactive when trim is installed.

D. All levers to hazardous areas (mechanical, electfical spaces, etc.) shall have a knurled surface.

DOOR CLOSERS

A. All door closers, unless otherwise specified or shown on the drawings, shall be full rack and pinion liquid type with cast iron or extruded aluminum cases, capable of controlling door through 180° of swing.

1) Surface closers shall be adjusted by key valves. Furnish six (6) adjusting keys.

2) No closer shall be installed on the outside of any exterior door nor on the corridor side of any room door. Wherever it is necessary to install a closer on the side of a door away from the butts, a parallel arm shall be used. Corner or soffit brackets will not be permitted. Corridor installation is acceptable where abutting walls prevent normal installation. All fastenings to the door shall be by sex bolts.

B. All door closers must be covered by a 5-year factory guarantee against defective material or workmanship.

C. The successful bidder is required to keep in touch with the progress of the job and have a factory representative visit the job to see that all closers are properly installed and adjusted at completion of the installation.

BUTTS

A. Butts shall be of the class as indicated by manufacturers number in the hardware sets. All butts shall have sufficient throw to clear the door trim, plinth, or cove base, but shall have no more throw than is necessary.

1) All butts for out-opening exterior doors shall have pins held in place by a set screw which can only be removed while the door is open.

FLUSH BOLTS

Edge mount all flush bolts unless specifically noted to be face mounted.

DELIVERY

A. All hardware shall be delivered to the job site, securely boxed, bagged, wrapped, or otherwise packaged, complete with screws, bolts, anchors, or other fasteners as may be required for proper and secure installation.

1) Each package shall be labeled, tagged, or marked with schedule item number or otherwise unmistakably identify the contents with the location of the installation.

B. Each delivery shall be accompanied by a dray ticket listing the items by schedule item number or description correlated to the hardware schedule.

KEY CONTROL

Furnish and install one complete wall key cabinet with lock and with sufficient hooks for all the cylinder locks, padlocks and cabinet locks for the building, plus 10% extra and miscellaneous keys. The system shall be what is known as the double tag system. The file key has a tag of a different color from the duplicate key. All keys have a fiber tag. Also, provide system with triple cross index, collection envelopes, receipt forms, etc.

KEYING

A. All locks, panic devices, cylindrical locks, cabinet locks, and padlocks to be great grand and grandmaster keyed to existing system.

B. Contractor shall schedule keying meeting with owner and Architect. Locks shall be master keyed, sub-mastered, keyed alike, or otherwise keyed upon contractor's written confirmation of keying with owner prior to placement of the order with the manufacturer.

C. Two or more doors entering the same room shall be keyed alike in one set for the room.

D. Furnish ten (10) master keys; two (2) change keys for each individually keyed lock.

HARDWARE SCHEDULE

NOTE: The Hardware Schedule listed is intended to be a general representation of the hardware needs for this project, the Bidder shall provide, as part of his bid, all items necessary for a complete installation as may be consistent with the door's proposed use. The Bidder shall employ the services of a recognized architectural door hardware consultant that has a record of successful performance for supplying a final door hardware schedule that meets or exceeds the requirements indicated in Contract Documents for the types, finishes, and quantities of door hardware, including fasteners, and Owner's maintenance tools as necessary to comply with specified requirements and as needed to install and maintain hardware. Where items are not specifically addressed or where conflicting instructions are present, Hardware consultant shall, as part of his bid, amend the hardware schedule as required. It shall be the responsibility of the Bidder's Hardware Consultant to coordinate the supplying of appropriate and compatible hardware for all doors and entrances including those being supplied by aluminum storefront manufacturers.

Hardware is based on the following manufacturers:

Cylinders & Deadbolts - Falcon
Locks and Latchsets - Falcon
Butts - Hager
Panic Devices – Von Duprin
Closers- LCN (Norton)
Push, Pulls, Flush Bolts – Hager
Thresholds, Seals, Drip Caps, Sweeps – National Guard Products
Kickplates - Hager
Door Stops, Silencers - Hager

Set #1 – Exterior

3	Butts	BB1191 (4-1/2 x 4) – 605 finish
1	Rim Cylinder	C987/C953
1	Cylinder Core	C 607
1	Closer	4110-3077SCNS
1	Panic Device	99F/99NL-F – 605 finish
1	Kick Plate	J 102 – 605 finish
1 Set	Seals	160 V
1	Threshold	896 S
1	Drip Cap/Sweep	101 V

Set #2 – Conference & Breakroom

3	Butts	BB1279 (4-1/2 x 4-1/2) – 605 finish
1	Cylinder Core	C 607
1	Lockset	T-521 Dane – 605 finish
1 Set	Silencers	307 D
1	Door Stop	243 F – 605 finish

Set #3 – Electrical Room

3	Butts	BB1279 (4-1/2 x 4-1/2) – 605 finish
1	Cylinder Core	C 607
1	Lockset	T-521 Dane – 605 finish
1 Set	Smoke Seals	5050 B
2	Door Stop	243 F – 605 finish
2	Surface Bolts	279D – 605 finish

Set #4 – File Room

3	Butts	BB1279 (4-1/2 x 4-1/2) – 605 finish
1	Cylinder Core	C 607
1	Lockset	T-521 Dane – 605 finish
1	Closer	4110-3077SCNS
1 Set	Silencers	307 D
2	Door Stop	243 F – 605 finish

END OF SECTION 08710

08810 THRESHOLDS AND WEATHERSTRIPPING

SCOPE

Furnish and install threshold, door bottom seal, door shoe and weatherstripping at all exterior doors. Install astragal meeting stile seal at each set pairs of exterior doors.

MATERIALS

A. Thresholds: National Guard Products, Inc. No. 896 S, 1/2" x 5", aluminum (605 finish).

B. Door Bottom Seals: National Guard Products, Inc. No. I99N, aluminum and vinyl (605 finish).

C. Weatherstripping:

1) Exterior Door Head and Jambs: National Guard Products, Inc. No. 160V, aluminum with vinyl bubble (605 finish).

D. Smoke Seal:

1) Mechanical Room Door Head and Jambs: National Guard Products, Inc. No. 5050B, aluminum with vinyl bubble (605 finish).

E. Astragal/Meeting Stile Seals: National Guard Products, Inc. No. 125NG (605 finish).

F. Approved Manufacturers: A. J. May; Pemko; Chamberlain; Zero; Accurate.

INSTALLATION

A. Install in accordance with manufacturer's printed instructions and as indicated on the drawings.

B. Adjust for tight, snug fit without binding, even around all sides.

C. Extend thresholds full width of opening. Notch at stops and set interior toe in full bed of caulkng compound.

D. All thresholds and weatherstripping shall be installed with appropriate screws and anchors as required for permanent secure anchorage. Do not use wood plugs in concrete!

E. All items shall be installed with anchors appropriate to the construction; see Section 05200.

END OF SECTION 08810
END OF DIVISION 8

DIVISION 9 FINISHES

09250 GYPSUM DRYWALL

SCOPE

A. Provide all wood framed gypsum board partions, furring, and ceiling shown on drawings.

GENERAL

B. In cold weather, the building shall be heated during application of gypsum board and joint treatment. Maintain a uniform temperature in the rande of 45 degrees F to 60 degrees F. Provide ventilation to eliminate excessive moisture.

C. All materials shall be delivered to the job in original unopened containers or bundles and shall be properly stored to prevent damage.

D. Minimum installation and application standards of all materials shall be in accordance with these specifications and the latest printed directions of the manufacturer. Products of the United States Gypsum Co., National Gypsum Co., or approved alternate may be used.

E. Double stud partitions and/or necessary furring shall be provided when required to conceal piping, conduit, or other incidental items.

F. Insofar as possible, use metal framing in lieu of wood for blocking and furring.

G. Exterior wall metal stud framing shall be according to Specifications Section 05400.

MATERIALS

A. Studs: Minimum 25-gauge "ST" galvanized steel. Use "SN" and "SJ" when heights exceed allowable "SJ" heights. Increase stud gauge from 25 gauge to 14 gauge for various stud sized required to meet required wall height. Provide studs in sizes as shown on the drawings. Increase stud size and gauge for height conditions in accordance with the manufacturer's written recommendations to meet L/240 deflection. (At Contractor's Option)

B. Floor and Ceiling Runners: Provide size and gauge to match studs.

C. Drywall Furring Channels: Galvanized steel 7/8" x 1-3/8".

D. Gypsum Board Standard: 5/8" thick "Firecode", (ASTM C36 for Type X), Type SW, U.L. 48" wide and in lengths as long as practicable to minimize the number of joints. Gypsum board walls receiving ceramic tile shall be moisture resistant tpe (ASTM C630, Type X).

E. Manufacturers: Subject to compliance with requirements, provide products by one of the following:

American Gypsum Co.
Flintkote Products, Genstar Building Materials Co.
Georgia-Pacific Co.
Gold Bond Building Products Div., National Gypsum Co.
United States Gypsum Co.

F. Provide Type X at each side of party walls to bottom of roof deck and where required for fire-resistance rated assemblies. Provide double layer 5/8" "Firecode", Type "X" at interior side of File Room.

G. Trim Accessories: Provide mfr's. standard metal trim accessories, of the beaded type with face flanges for concealment in joint compound except where semi-finishing or exposed type is indicated. Provide corner beads, L-type edge trim beads, U-type trim beads, special L-kerf-type edge trim-beads, and one piece control beads.

H. Control Joints: Equal to U.S.G. #093.

I. Gypsum Wall Screws: 1" for single ply; 1-5/8" for double ply; (nailed installation will not be acceptable).

J. Wire Hangers: 12-gauge galvanized soft steel wire.

K. Carrier Channels: 1-1/2" cold rolled steel channels, asphaltum painted. Armstrong drywall furring system - #7900 main beams, #8945 furring tees, and #7838 wall moldings are also approved.

L. Thermal Insulation: Refer to Section 07200.

M. Caulking Compound: U.S.G. acoustical caulk at floor and head.

N. Sealant: Sonolastic one-part sealant, standard consistency as manufactured by Sonneborn or Synthacalk GC-9 by Pecora Corp.

O. Sound Attenuation Blankets: Semi-rigid mineral fiber without membrane, FS HH-I-521, Type I, thicknesses as shown.

P. Joint Tape: ASTM C 475, paper reinforcing tape.

Q. Joint Compound: ASTM C 475, of the type indicated.

Provide vinyl type powder for interior work.

Provide a single multi-purpose compound for 3 courses of compound application.

Provide chemical-hardening type for tape bedding, and readymixed vinyl-type for topping, on interior work.

Provide water-resistant type manufactured by United States Gypsum Co. for use with water-resistant backing board.

R. Water-Resistant Adhesive: Type I organic adhesive for ceramic tile complying with ASTM A 136.1.

S. Access Doors: Inryco/Milcor Style DW, size 14" x 14" in walls and 22" x 22" in ceilings. Baked enamel prime coat. Contractor to finish paint. Concealed spring hinges. Flush, screwdriver operated steel cam lock. Door shall be manufactured with drywall bead attached (galvanized steel No. 800 for single ply; No. 900 for double ply).

T. Install supplementarv framing runners, furring, blocking and bracing at openings and terminations in gypsum drywall and where required for support of other work which cannot be adequately supported on gypsum board alone.

ERECTION

A. Runners shall be aligned accurately at floor and ceiling and securely anchored with suitable fasteners spaced not more than 24" o.c.. Set runners in acoustical caulking.

B. Studs shall be positioned vertically in the runners, spaced no greater than 16" o.c.. Anchor all studs located adjacent to door and window frames, partition intersections, and corners to runner flanges by

positive screw engagement through each stud flange and the runner flange. If stud length exceeds length of studs manufactured, then studs shall be securely spliced with a minimum 8" nested lap or stud splice installed in accordance with manufacturer's printed directions. Install channel stiffeners, metal flat strap or gyp. bd. braces between studs in chase wall or other clips, stiffeners, etc. As recommended by manufacturer for specific job conditions.

C. Metal studs, unless otherwise shown, shall continue from floor to ceiling runner attached directly to structure above. Furring channels spaced 16" o.c. shall be used where gypsum board is applied over masonry. Studs shall be securely anchored to jamb and head anchor clips of each frame by bolt screw attachment. Over metal frames, a cut to length section of runner track with a web-flange bend at each end shall be placed horizontally and securely positioned at the location of vertical joints over the door frame header extending to the ceiling runner. Double application of studs shall be used where wall thickness requires. Double studs shall be used at each door jamb. Studs shall be properly sized for partition height. Spot grout at door jambs as recommended by the drywall material manufacturer.

D. Install all studs in accordance with manufacturer's written directions unless these specific job specifications and drawings are more stringent.

E. Install all partitions, structural fireproofing, etc. to meet specific U.L. code references which supersede any other specifications, drawings or manufacturer's recommendation notes.

F. Gypsum wallboard shall be applied with long dimension parallel to framing members. Wallboard of the maximum practical length shall be used to minimize end joints. All end joints shall be neatly fitted and staggered. Joints on opposite sides of the partitions shall be so arranged as to occur on different studs. (Pre-finished gyp. bd. installed per mfgr. Directions for 1-hour rating). Install gypsum board so bottom remains above finish floor height (not to exceed ½").

G. Use 1" long type "S" steel screw fasteners for attaching gypsum board to metal studs. Screws shall be spaced at a maximum of 12" o.c. in the field of the board and 8" o.c. staggered along the vertical abutting edges. Screws shall be power-driven with an electric screw driver and screw heads shall provide a slight depression below the surface of the wallboard. Screws shall not be driven closer than 3/8" from edge and ends of the board.

H. Where double thickness of wallboard is required, space screws 12" o.c. for base layers. Apply both layers vertically with joints in face layer offset from base layer joints. Use 1" type "S" steel screws for base layer and 1-5/8" Type "S" steel screws for face layer laminated to the base layer.

I. Line of intersection between gypsum board and door frames shall be a neat finished filled jointing.

J. Provide control joints approximately 20'-0" o.c. break wallboard behind joint using double studs. In corridors, provide expansion joints on both sides of door frames and at approx. 20'-0" o.c. Install joint as specified in USG Handbook. Attach control joints to face layer with staples spaced 6" o.c. on both flanges along entire length of joint. Install control joints at:

1. All new windows from upper corners to above ceiling, minimum, and from lower corners to floor.
2. All new doors from both corners to above ceiling, minimum.
3. Control joints in slabs and behind joints in exterior masonry.
4. Maximum distance between control joints not to exceed 20'-0".

K. Form control joints with 1/2" space between boards. Install acoustical sealant at base of space, and apply trim accessory at face.

L. Form "Floating" construction for gypsum boards at internal corners, except where special isolation or edge trim is indicated.

M. Isolate drywall work from abutting structural and masonry work; provide edge trim and acoustical sealant as recommended by mfr.

N. Install sound attenuation blankets where indicated, without gaps; and support where necessary to prevent movement or dislocation.

O. Install water-resistant backing board where indicated, to receive thin-set tile and similar rigid applied finishes at tubs, showers and similar "wet" areas.

P. Moisture resistant wallboard edges shall be sealed where cut.

GYPSUM BOARD CEILINGS

A. All ceilings scheduled to receive gypsum board finish shall be suspended unless otherwise noted.

B. Install supports for hanger wires accurately using power actuated fasteners. Space hangers 4'-0" o.c. maximum and provide 1-1/2" carrying channels at 16" o.c. maximum. Attach furring channels with clips manufactured for this purpose.

C. Gypsum wallboard shall be erected with long dimensions at right angles to furring channels. Joints shall be staggered.

D. Gypsum board applied on ceilings shall be fastened with drywall screws spaced 12" o.c. in the field and 8' o.c. staggered along abutting edges. Treatment of joints, screw heads, angles and corners shall be as specified for walls.

E. Fire-rated ceilings located in corridors, halls, exit passage ways and as indicated on plans and details shall be installed in accordance with UL Design No. P515. Supply and install all necessary materials to obtain fire rating.

ACCESS DOORS

Install wall and ceiling access doors in gypsum board to provide access to equipment, valves, etc.

METAL TRIM

Provide metal trim at all gypsum board edges where gypsum board intersects with dissimilar materials and/or shown on drawings.

JOINT TREATMENT APPLICATION

A. Mix joint compound in strict accordance with manufacturer's recommendations.

B. Apply taping or embedding compound in a thin uniform layer to all joints and angles to be reinforced. Immediately apply Perf-A-Tape reinforcing tape centered over joint and seated into compound. Sufficient compound (approx. 1/64" to 1/32") must remain under the tape to provide proper bond. Follow immediately with a thin skim coat to embed tape, but not to function as a second coat. Fold and embed tape properly in all enterior angles to provide a true angle. The tape or embedding coat must be thoroughly dry prior to application of second coat.

C. Apply second coat of joint compound over embedding coat, filling panel taper flush with surface; cover tape and feather out slightly beyond first coat. On joints with no taper, cover the tape and feather out at least 4" on either side of tape. Allow second coat to dry thoroughly prior to application of finish coat.

D. Spread finish coat evenly over and extend slightly beyond second coat on all joints and feather to a smooth uniform finish. Over tapered edges, do not allow finished joint to protrude beyond plane of the

surface. Apply a finish coat to cover tape and taping compound at all tapered angles and provide a true angle. Where necessary, sand between coats and following the final application of compound to provide a smooth surface ready for decoration.

E. All joints from finish floor to top of gypsum board partitions shall receive joint treatment application. This includes gypsum board above ceilings, at mezzanines, etc.

FINISHING FASTENERS

F. Apply a taping or all-purpose type compound to fastener depressions as the first coat. Follow with a minimum of two additional coats of topping or all-purpose compound, leaving all depressions level with the plane of the surface.

FINISHING BEADS AND TRIMS

G. Apply first coat to all bead and trim and properly feather out from ground to plane of surface. Compound must be thoroughly dry prior to application of second coat.

H. Apply second coat in same manner as first coat, extending compound slightly beyond onto face of panel. Compound must be thoroughly dry prior to applications of finish coat.

I. Apply finish coat to all bead and trim, extending compound slightly beyond the second coat and properly feathering from ground to plane of surface. Sand finish as necessary to provide a flat smooth surface ready for decoration.

J. Quality Assurance: Drywall finish shall adhere to specifications outline by A.W.C.I., P.D.C.A., G.A., and C.I.S.A.

END OF SECTION 09250

09300 VENEER PLASTER

1. GENERAL

Metal Support Standard: ASTM C 754.

Gypsum Base Application Standard: ASTM C 844.

Gypsum Veneer Plaster Application Standard: ASTM C 843.

Submittals: Product data for each product specified

Fire-Resistance Ratings: Provide veneer plaster assemblies with ratings indicated and conforming to assemblies tested and listed by organization acceptable to authorities having jurisdiction.

2. PRODUCTS

Manufacturers: Subject to compliance with requirements, provide veneer plaster products by one of the following:

Georgia-Pacific Corp. Gold Bond Building Products Div., National Gypsum Co. United States Gypsum Co.

Steel Framing for Suspended and Furred Ceilings: As follows:

Main Runners: Cold-rolled steel channels, 0.0598 inch minimum thickness of base metal, protected with rust-inhibitive paint, sizes per ASTM C 754.

Hanger and Tie Wires: ASTM A 641, soft, Class 1 galvanized.

Concrete Inserts: Corrosion resistant, capable of sustaining load equal to 3 times that imposed by ceiling construction, tested per ASTM E 488.

Steel Rigid Furring Channels: ASTM C 645; hat-shaped; 0.0179 inch, unless otherwise indicated; 7/8 inch deep.

Resilient Furring Channels: ASTM C 645, designed to reduce sound transmission, configured as follows:

Double Leg Configuration: Hat-shaped, with 1-1/2 inch wide face and slotted metal legs (webs).

Steel Framing for walls and Partitions: As follows:

Studs and runners: ASTM C 645: 00179 inch thick, unless otherwise indicated: depth as indicated

Steel Rigid Furring Channels: ASTM C 645; hat-shaped; 0.0179 inch; unless otherwise indicated; 7/8 inch deep.

Steel Resilient Furring Channels: ASTM C 645, designed to reduce sound transmission, configured as follows:

Double Lea Configuration: Hat-shaped, with 1-1/2inch wide face and slotted metal legs (webs).

Z-Furring Members: Zee-shaped furring members with slotted or nonslotted webs; formed from ASTM A525, G60, hot-dipped galvanized steel sheet; 0.0179 inch thick, unless otherwise

indicated; depth as indicated.

Back-up Board Products: As follows:

Gypsum Backing Board for Multi-Layer Applications: Gypsum backing board, ASTM C 442; or gypsum base, ASTM C 588; or gypsum wallboard, ASTM C 36, type as follows, thickness as indicated:

Type 1: Regular, unless otherwise indicated.
Type 2: Foil-backed where indicated.
Type "X": For fire-resistance-rated assemblies.

Plywood Back-up: 1/2" CDX plywood sheathing.

Trim Accessories: ASTM C 1047, cornerbeads, edge trim, and control joints formed from metal, plastic or metal combined with paper; with metal as follows:

Sheet steel coated with zinc by hot-dip process or electrolj1ic processes, or with aluminum.

Joint Reinforcing Materials: ASTM C 587, materials as follows: Paper or open weave glass fiber fabric.

Embedding Material for Joint Tape: As recommended by veneer plaster manufacturer for use with joint tape material indicated.

For high strength veneer plaster and paper tape, use setting-type joint compound.

Veneer Plaster Materials: As follows:

Two Component Regular Veneer ASTM C 587, separate base coat and finish coat formulations for application over the following:

Substrate: Gypsum base.
Substrate: Unit masonry.
Substrate: Concrete.
Substrate: Plywood.

Finish Coat Aggregate for Sand Float Finish: White silica sand passing a 3D-mesh screen.

Miscellaneous Materials: As follows:

Bonding Compound: ASTII.I1 C 631.

Laminating Adhesive: As recommended by veneer base manufacturer for laminating face layers to base layers of gypsum board.

Spot Grout for Door Frames: ASTM C 475, setting-type joint compound.

Fastening Adhesive for Wood: ASTM C 557.

Gypsum Base Screws: ASTM C 1002.

Gypsum Base Nails: ASTM C 514.

Asphalt Felt: ASTM D 226, Type I (No. 15).

Concealed Acoustic Sealant: Product complying with Division 7 Section "Joint Sealers."

Sound Attenuation Blanket: ASTM C 665, Type I unfaced mineral fiber blanket insulation.

Mineral Fiber Thermal Insulation: ASTM C 665, Type I unfaced blanket insulation.

Extruded Polystyrene Board Thermal insulation: ASTM C 578, Type IV.

Polyethylene Vapor Retarder; ASTM 04397, thickness and maximum permeance as follows: 4.0 mils, 0.19 perms.

3. INSTALLATION

Concrete Substrate Preparation: Clean and remove surface projections, and apply bonding compound.

Installation of Steel Framing: Comply with referenced standards and manufacturer's directions for installation of metal support systems. Do not bridge building expansion joints with support systems; frame both sides of joints with furring and other supports indicated.

Gypsum Base Application: Comply with referenced standard for application and fastening methods indicated below:

Single Layer Application: Apply gypsum boards to supports as follows: Fasten with Screws.

Double Layer Application: Apply base and face layer to base layer as follows:

Fasten both base layers and face layers separately to supports with screws.

Installation of Trim: As follows:

Install metal Corner Beads at external corners.
Install metal edge trim where edge of gypsum board would otherwise be exposed.
Install control joints at locations indicated.

Installation of Joint Reinforcement: Reinforce interior angles and flat joints with joint tape and embedding material.

Veneer Plastering: Comply with referenced standard and veneer plaster manufacturer's directions for the following:

Provide smooth trowel finish.

END OF SECTION 09300

09310 TILE

Standards: Mortar and grout materials and installation standards of the American National Standards Institute (ANSI) and Standard Specification for Ceramic Tile ANSI A137.1 apply to the work, except as otherwise indicated.

Submittals: With manufacturer's technical data and installation instructions for tile work, submit 3 samples of each type, color, and texture of tile mounted on 12" square backing with joints grouted.

Colors, Textures, and Patterns: As selected by Architect from manufacturer's standards.

Sizes and Thicknesses: As indicated or, if not indicated, as selected by Architect form manufacturer's standard sizes and thicknesses.

Tile Grade: "Standard Grade" unless otherwise indicated.

Glazed Wall Tile: Factory mounted flat tile and as follows:

Face: Plain with square, modified square, or cushioned edges.

Mounting: Back mounted.

Trim Shapes: Same material, size, color, and texture as field tile.

Dry-Set Mortar: ANSI A118.1.

Dry-Set Grout: ANSI A118.6.

Installation: Comply with ANSI A108.1 and 108.4 through A108.10, as applicable for type of tile, setting materials, grout and methods of installation. Comply with manufacturer's instructions for application of proprietary materials.

Joint Pattern: Use grid pattern with 1/16" wide joints, unless otherwise indicated.

Expansion, Control, Contraction, and Isolation Joints: As indicated.

Edge Strips: Provide at exposed edge of tile meeting carpet, wood, or resilient flooring, unless otherwise indicated.

Cleaning and Protection: Clean tile in accordance with applicable ANSI standard for type of tile and method of installation used and manufacturer's instructions. Apply heavy kraft paper or other protective covering to prevent surface damage.

END OF SECTION 09310

09510 ACOUSTICAL CEILINGS

Standards:

Acoustical Materials: FS SS-S118.

Suspension System: ASTM C 635 for materials; ASTM C 636 for installation.

Surface Burning Characteristics: Flame spread: 25 or less; smoke developed 50 or less; per ASTM E 84. UL listed and marked.

Fire-Resistance: As indicated by reference to design designation in UL Fire Resistance Directory; tested per ASTM E 119.

Submittals: 6" x 4" square samples of each exposed acoustical unit; 24" long samples of each exposed suspension member and molding. Provide 1% of total quantity for Owner's maintenance stock locate where directed by Architect.

Type III Panels - Mineral Composition with Standard Washable Painted Finish:

Nodulated, Cast or Molded Units, Fissured: Form 2, pattern "D", NRC 60, LR 1 (0.75 or 0.70), STC 30-34 or 35-39, square edge, white, 24" x 48" x 3/4".

Products: Subject to compliance with requirements, provide one of the Following:

Travertone, Fissured Design; Armstrong World Industries, Inc.
Safetone Natural Fissured; Celotex Corp.
Acoustone Fire Code "F" Fissured; United States Gypsum Co.

Suspension System: As required to support acoustical units, fixtures and other components as indicated, including anchorages, hangers, runners, cross runners, splines, clips, moldings, fasteners and other members, devices and accessories. Comply with requirements of ASTM C 635.

Hanger Wire: Not less than 12-gage (0.106") galvanized steel.

Type: Exposed Direct-Hung Steel Suspension System.

Exposed Runner Type: Double Web.

Fill Structural Class: Intermediate-Duty System.

Finish: Painted, white.

Edge Molding: Metal channel type with single flange exposed.

Finish: Match exposed suspension member finish.

Layout: Balance ceiling borders on opposite sides, using more-than-half width acoustical tile.

Tolerance: 1/8" in 12'-0" level tolerance.

Pattern Direction: One-way align joints.

Suspension System: Secure to building structure, with hangers spaced 4'-0" along supported members.

Edge Moldings: Secure to substrate with screw anchors spaced 16" o.c. Set with concealed bead of acoustical sealant. Miter corner Joints.

Cope exposed flanges of intersecting suspension members for flush intersections.

Install acoustical tile with spline (or suspension flange) or tongue and groove at each joint.

Place compression springs 12" o.c. in edge moldings of suspended tile systems.

Install acoustical panels with hold-down clips in the areas indicated; spaced as recommended by panel manufacturer.

END OF SECTION 09510

09650 RESILIENT FLOOR

SCOPE

Furnish and install resilient floor coverings and vinyl bases as shown, scheduled, and specified.

GENERAL REQUIREMENTS

Guarantee: Contractor shall furnish written guarantee that all work required by this section shall be free from defects in materials and workmanship for a period of one year from date of acceptance of installation.

Manufacturer's Data: For purpose of this specification, materials manufactured by Congoleum Flooring Products are used as references.

Samples: Submit samples of each type of floor covering for color selection by Architect. Submit technical data on all other material specified.

Delivery and Storage: Materials shall be delivered to the job site in original containers and clearly labeled. Adhesives shall be in full sealed containers.

Clean Up: After resilient flooring materials have sufficiently sealed, clean floors in accordance with tile manufacturer's recommendations.

Protection: General contractor shall protect resilient flooring work in this section until acceptance by owner.

Replacement Tile: At completion of job, deliver to the owner one box for every fifty (50) boxes installed of each floor tile used in job for owner's future use; tile shall be full size and undamaged.

MATERIALS

Vinyl Composition Tile: Shall be standard size 12" x 12" x 1/8" thick, Congoleum Commercial Tile Flooring; Standard Grade, Choices and Alternatives Series or approved equal as selected by Architect. Manufacturer selected shall provide the same or more color selections as the specified manufacturer.

Bases: Shall be Burke Flooring Products rubber base, 1/8" thick, 4" high; coved toe (set-on type as selected by Architect. Flexco, Roppe, and Johnsonite are approved manufacturers. Base colors as selected by Architect.

Adhesive: Shall be Burke adhesive.

Fill Material: Tile manufacturer's recommended latex under-layment (no floor stone allowed).

Provide tile reducer (similar to No. CB-XX-C reducer strip by Johnsonite) in color to match adjacent flooring at areas where flooring transitions from resilient tile to concrete.

INSTALLATION

Floors:

Concrete subfloor shall be scraped free of any foreign matter that would impair adhesive bond. Floors shall be swept and mopped as necessary to remove sand or any materials that could cause damage to tile or reflect as imperfection in tile installation. Spread adhesive according to manufacturer's directions for coverage, open time, etc. Do not spread more adhesive than can be covered by tile the same day. Unless indicated otherwise, lay all tiles from center of area with variation (not less than 6") taken up in border tiles. Tiles shall be laid square with room axis. Use only full, unbroken tiles without cracks, chips or deformation.

Cut all perimeter tile carefully to fit closely against abutting surfaces. Lay tile with reverse grains in alternating tiles with tight, straight joints without open cracks, voids, raising and puckering at joints. Cut tile accurately to fit tight to all profiles. Surfaces shall be rolled, weighted, etc. as directed by manufacturer of tile and/or adhesive. Install reducer strips where edge of tile is exposed and at adjacent tile. All work shall be done by experienced, skilled mechanics of this trade. Installation procedures shall be in strict accordance with manufacturer's printed installation manual.

Floor covering subcontractor shall inspect subfloor before starting his work. Use fill material in low spots to level floor. Notify Architect, in writing, of any defects in the subfloor. Starting of work of this section shall mean acceptance of the condition of the subfloor by this contractor for work of this section. Architect may select tile colors for use in room with another color as border color or accent pattern.

Maintain a minimum temperature of 70° F. in rooms and subfloors at least 48 hours before, during, and after installation of tile. Do not install tile on damp or wet floors.

Cleaning: Immediately after setting tile and base, remove excess adhesive from surface and from other adjacent materials. Sweep floor and thoroughly machine buff as directed by manufacturer. No moisture or dirt, etc. shall be allowed under tile. Protect floor from stains, marks, scratches, and other damage.

Replace any defective or damaged tile or work evidencing poor workmanship. Reclean and buff all tile again just before final acceptance of building.

END OF SECTION 09650

09680 CARPET

GENERAL

SCOPE

Provide and install all carpet and accessories required for a complete installation.

STANDARDS

The following association standards (and all latest revisions thereto) shall apply to this work in their full content, except as may be noted herein. The contractor is responsible for the application to specific items found therein.

1. American Carpet Institute, Inc., 350 Fifth Avenue, New York, N.Y.
2. Direct Glue Down of Double Jute Back Carpet as published by Jute Carpet Backing Council, Inc., 25 Broadway, New York 10004.
3. Furnish 18" x 18" carpet samples for color selection by architect. Architect may select several carpet colors for use on the project.
4. Provide neat, tight seams; butter edge of seam joints. Provide floor plan layout showing all seam locations for architects review.

PRODUCTS

CARPET

Carpet selection will be made from the following: Mohawk "Supertron SD" woven Interlock 30.0 oz. yarn weight/sq.yd., Mohawk "Palazzo" woven interlock 32.0 oz. yarn weight/sq. yd., Mohawk "Campobello" woven interlock 28.0 oz. yarn weight/sq. yd. or approved equal.

QUALITY ASSURANCE

Installer: A firm with not less than 5 years experience in installation of commercial carpet by methods similar to those required for this project.

All materials shall be installed by workmen skilled in the carpet trade and shall meet or exceed the highest standards of the carpet industry.

EXTRA STOCK AND REMNANTS

Package and leave with owner usable overage and remnants of carpet, 4 square feet and larger, not to exceed a total of ten square yards.

DELIVERY AND STORAGE

A. Deliver carpet in rolls covered with original mill protective wrapping and in sealed cartons with register number tags attached to each roll or carton. Deliver tags to the architect along with a sample of carpet cut from each roll.

B. Store flat in dry, protected, well-ventilated areas.

C. Environmental Conditions: Building and carpet materials shall be heated at a minimum of 65 degrees F. for at least 24 hours prior to installation with the relative humidity not more than 65%. Keep temperature at same level night and day during installation and for at least 40 hours after completion of installation. A minimum temperature of 50 degrees F. shall be maintained thereafter.

GUARANTEE

A. Provide owner with installer's written guarantee that shall guarantee completed installation to be free of defects in materials and workmanship for a period of one year after final acceptance. Guarantee shall provide for replacement of defective work at no cost to owner.

B. Provide owner with manufacturer's written guarantee, signed by an officer of the firm, that warrants carpet against delamination, edge ravel, and tuft bind for a period of at least fifteen (15) years. Warranty shall provide for replacement of defective material at no cost to owner.

C. Provide owner with manufacturer's written guarantee, signed by an officer of the corporation, that warrants carpet against excessive wear (loss of over 10% of face yarn by weight) within a period of at least five (5) years. Warranty shall provide for replacement ofwom areas at no cost to owner.

EXECUTION

INSPECTION AND PREPARATION

A. Prior to installation, inspect sub-flooring for cracks, holes, abrasions, rough spots, and ridges and be sure floor has been cleaned of dust, dirt, solvents, oil, grease, paint, plaster, wax and other substances detrimental to proper performance of adhesive and carpet or other conditions that will adversely affect execution and quality of work. Report discrepancies in writing to general contractor or owner with copies to architect.

B. Concrete slabs shall be aged 60 days minimum. If directed, perform moisture test and obtain acceptable results. See manufacturer's specifications for porosity of floor.

Fill depressions, holes, and cracks with latex underlayment. Do not use a water base "floor stone" product. Trowel and featheredge underlayment to a smooth and level surface. Grind down high spots and finish with underlayment. Finish floor level to within 1/8" in 10 feet. Do not proceed until defects are corrected.

Carefully check dimensions and other conditions in facilities and be responsible for proper fitting of carpet in areas designated.

E. Do not proceed until defects are entirely corrected. Application or installation of carpet shall constitute acceptance of substrates.

INSTALLATION

Installation will be by method of bonding directly to floor without cushioning, using water resistant carpet adhesive of type recommended by carpet mill.

A. All materials shall be installed by qualified carpet mechanics under proper supervision. Prior to installation, all floor irregularities shall be repaired and the floor shall be thoroughly cleaned with all grit and dirt removed before carpet is laid.

B. Lay carpet on floors with the run of the pile in same direction as anticipated traffic flow.

C. Do not change run of pile on anyone room or from one room to next where continuous through a wall opening. If multiple wall openings exist, lay carpet with run of pile continuous through openings with heaviest anticipated traffic flow.

D. Use manufacturer's recommended adhesive.

E. Cut two pieces of carpet to length, plus amount of trim as recommended by manufacturer and lay in place. Form seams by method as recommended by the carpet manufacturer (cut each side separately). Snap a chalk line to mark seam location.

F. Carpet installer shall apply a bead of latex adhesive to the cut edge following manufacturer's instruction.

G. Place the edge of one length along the chalk line. Smooth out wrinkles. Then stay nail at 12-18 inch (304.8-457.2mm) intervals down the carpers center line parallel to its edge. The line of stay nails may have to be made closer to the seam if so dictated by the previously determined open time or the number of men present. Use long thin nails hammered through carpet scraps for greater visibility and easier removal. Make sure carpet does not shift from the chalk line.

H. Check the pile direction before unrolling the second length.

I. Using a notched trowel (1/8" x 1/8" x 1/8") spread the adhesive evenly, using a semi-circular motion to avoid excessive deposits or missed areas. Check the trowel occasionally to see that it is free of foreign matter and also that the 1/8" notch is maintained.

J. Since atmospheric conditions, type of substrate, and spread rate vary from job to job, the determination of the proper open time of the adhesive must be made by the installer.

K. Next, space the crew evenly apart and pick up the folded back first edge. Hold the edge taut and walk it in toward the proposed seam.

L. Have the center man walk slightly faster and ahead of the others. This forms a wedge of carpet at the center which he places on the spread adhesive.

M. Followed by the rest of the crew until the entire previously folded back portion is laid back on the adhesive. This wedge carrying technique helps avoid wrinkles in the carpet when placing it on the adhesive.

N. The next optional but useful step is to sweep the carpet. Natural fiber push brooms offer little resistance to the sweeping. Sweep from the stay nails toward the cut edge and both ends of the length to allow any trapped air to escape.

O. Now use a roller 50-100 lbs. (22.68-45.36 kg) to roll the entire carpet. The rolling is very important since you must achieve a good transfer of adhesive from the floor to the carpet back in order to assure permanent adhesion. First roll across the width of the carpet to remove air pockets. Then roll in the length direction to assure complete adhesive transfer.

P. Now pick up the folded back second edge. This time have all the men walk in an even line to carry the edge toward the cemented-down first edge and place it on the adhesive.

Q. Since most of the fitting was previously made, the seam can be completed with minimal adjustments. The resulting seam should be tight but show no peak. By the same token, it should not be open and require kicking up as that would be difficult at this stage of the installation.

R. Remove the stay nails in both lengths. Brush and roll the cemented portion of the second length. This completes the adhesion of the seam portion in both starting lengths.

S. Finish the seam by brushing it with a stiff hand brush. Trim any protrusions with napping shears. Electric shears, such as animal shears, can be used on large installation.

T. Continue the above procedure throughout the installation striking a chalk line for the placement of each seam.

U. At columns and other penetrations, cut carpet with maximum possible overage. Position the seams made by these cuts first.

V. Neatly trim edgings of carpet for tight fit to walls and base; cut and fit evenly around projections and into trim strips.

W. Fit closely and evenly to, in, and through doorways, terminating carpet under doors.

X. Lay carpet with a minimum of seams in accordance with approved shop drawings. Do not use small carpet to fill strips. Do not place seams perpendicular to doors or entries. Minimize seams in traffic lanes. Do not install carpet from different dye lots adjacent to or abutting each other in the same areas. Materials abutting one another shall have no noticeable variation in color.

Y. Cross joints necessary due to layout of areas shall be at absolute minimum.

Z. Cross joints necessary due to length of rolls received shall be placed in cutting to avoid occurrence at conspicuous locations, near doors, or at pivot points.

AA. Install edge strip where carpet meets other flooring materials, including door opening locations. Trim toe of reducer to same thickness as adjacent flooring material. Use full length pieces only. Butt tight to vertical surfaces. Where splicing cannot be avoided, butt end and flush.

BB. Sew seams at risers. Place seams in non-conspicuous locations.

CC. Neatly cut carpet around floor openings, electrical outlets and other projections.

DD. Leave finished installation smooth and free of ripples, puckers or other defects.

PROTECTION AND CLEANING

A. After carpet installation is completed, remove remnants, wrapping paper and debris.

B. Remove loose pieces of yarn with sharp scissors.

C. Remove soiled spots from carpet using proper spot remover.

D. Clean carpet with commercial beater bar type vacuum cleaner.

E. Repair any damages or stains to adjacent materials caused by installer or his workmen.

F. Do not place heavy objects such as furniture on carpet surfaces for minimum of 24 hours or until adhesive is set. Replace carpet displaying adhesive "bleed through".

REPLACEMENT CARPET

Upon completion of the carpet installation, the carpet contractor shall deliver to the owner an amount of each type or pattern of carpet used equal to 1% of the net area laid but not to exceed ten (10) square yards. Trim strips and cutouts suitable for patching purposes shall be delivered to owner.

PRECAUTIONS

A. Precautions shall be taken to protect work performed or completed by other trades.

B. The carpet installer shall be responsible for his damages to work of other trades.

C. The carpet subcontractor shall inspect all surfaces to receive carpet prior to the beginning of any carpet installation and shall notify the general contractor and the architect, in writing, of any surfaces not properly prepared. Installation *of* carpeting assumes responsibility by carpet subcontractor of any defects of surface below.

D. Appropriate equipment will be used during the installation per manufacturer's recommendation.

E. Upon completion of the total installation of carpeting, the carpet shall be smooth, uniform, Pattern matched, and thoroughly cleaned in every respect. All remnants and scraps smaller than 3' x 3' shall be removed from the job site.

Maintenance Manuals: The carpet installer shall furnish the owner a minimum of three (3) printed copies of the manufacturer's recommendation for the care, cleaning, and maintenance for the carpet furnished. After installation is completed, the carpet installer shall instruct the owner's maintenance personnel in the care, cleaning, and maintenance of the installed carpet.

END OF SECTION 09680

09721 VINYL-COATED FABRIC WALL COVERINGS

GENERAL

DESCRIPTION

Section specifies vinyl coated fabric wallcovering and installation.

RELATED WORK

A. Color, pattern, type, direction of hanging and areas to receive wallcovering: Drawings Room Finish Schedule.

SUBMITTALS

A. Submit in accordance SHOP DRAWINGS, PRODUCT DATA, AND SAMPLES.

B. Samples:
   1. Each type and pattern as specified in Section 09 06 00, SCHEDULE FOR FINISHES.
   2. Size: Full width of mill run.

C. Manufacturer's Certificates:
   1. Compliance with CFFA W-101D.
   2. Wallcovering manufacturer's approval of adhesive.

D. Manufacturer's Literature and Data:
   1. Primer and adhesive.
   2. Installation instructions.
   3. Maintenance instructions, including recommended materials and methods for maintaining wallcovering with precautions in use of cleaning material.

QUALITY ASSURANCE

A. Finish one complete space with each type (color and pattern) of wallcovering showing specified colors and patterns.

B. Use approved sample spaces as a standard for work throughout the project.

DELIVERY, STORAGE AND HANDLING

A. Deliver in original unopened containers bearing the manufacturer's name, brand name, and product designation.

B. Store in accordance with manufacturer's instructions.

C. Handle to prevent damage to material.

APPLICABLE PUBLICATIONS

A. Publications listed below form a part of this specification to the extent referenced. Publications are referenced in the text by the basic designation only.

B. Chemical Fabrics and Film Association, Inc., (CFFA):
   2575-96(R2011) ..... Vinyl Coated Fabric Wallcovering

C. American Society for Testing and Materials (ASTM)
   G21-09 ..... Determining Resistance of Synthetic Polymeric Materials to Fungi

PRODUCTS

VINYL COATED FABRIC WALLCOVERING

A. Comply with CFFA-2575.

B. Fungi Resistance: ASTM G21, rating of 0.

C. Factory-applied clear delustered polyvinyl-fluoride (PVF) coating:

1. Minimum 0.0125 mm (1/2 mil) thickness.
2. Do not include PVF coating weight in minimum total weight.
3. Fire hazard classification with PVF coating: Class A unless specified otherwise.

D. Type II (Medium Duty)

ADHESIVE

A. Use only water-based adhesive having volatile organic compounds not more than 50 g/l.

B. Vermin and mildew resistant.

EDGE GUARDS OR TRIM

A. "J" shape with groove to receive the wallcovering.

B. Concealed edge feathered, not less than 19 mm (3/4 inch) wide.

C. Designed for adhesive attachment.

D. Use Vinyl

EXECUTION

JOB CONDITIONS

A. Temperatures:

1. Do not perform work until surfaces and materials have been maintained at minimum of 60° F. for three days before work begins.
2. Maintain minimum temperatures of 60° F until adhesives are dried or cured.

B. Lighting:

1. Do not proceed unless a minimum lighting level of 15 candlepower per square foot occurs.
2. Measure light level at mid-height of wall.

C. Ventilation:

1. Provide uniform continuous ventilation in space.
2. Ventilate for a time for not less than complete drying or curing of adhesive.

D. Protect other surfaces from damage which may be caused by this work.

E. Remove waste from building daily.

SURFACE CONDITION

A. Inspect surfaces to receive wallcoverings to assure that:

1. Patches and repairs are completed.
2. Surface are clean, smooth and prime painted.

B. Do not proceed until discovered defects have been corrected by other trades and surfaces are ready to receive wallcovering.

C. Carefully remove electrical outlet and switch plates, mechanical diffusers, escutcheons, registers, surface hardware, fittings and fastenings, prior to starting work.

D. Carefully store items for reinstallation.

E. Install Edge Guard or Trim:

1. Locate where shown or specified.
2. Run edge guards from top of base to ceiling or wainscot cap in continuous length.
3. Run wainscot cap trim level unless shown otherwise.
4. Install as specified by manufacturer of edge guard or trim, in adhesive.
5. Smooth adhesive edge. Do not leave adhesive exposed to view.
6. Leave ready to receive wallcovering

APPLICATION OF ADHESIVE

A. Mix and apply adhesives in accordance with manufacturer's directions.

B. Prevent adhesive from getting on face of wallcovering.

C. Apply adhesive to wallcovering back.

WALLCOVERING INSTALLATION

A. Use wallcovering of same batch or run in an area. Use fabric rolls in consecutive numerical sequence of manufacture.

B. Install material completely adhered, smooth, clean, without wrinkles, air pockets, gaps or overlaps.

C. Extend wallcovering continuous behind non-built-in casework and other items which are close to but not bolted to or touching the walls.

D. Install wallcovering before installation of resilient base. Extend wallcovering not more than 6 mm (1/4 inch) below top of resilient base.

E. Install panels consecutively in order in which they are cut from the roll including filling spaces above or below windows, doors, or similar penetrations.

F. Do not install horizontal seams.

G. Except on match patterns, hang fabric by reversing alternate strips, except as recommended by the manufacturer.

H. Cutting:

1. Cut on a work table with a straight edge.
2. Joints or seams that are not cut clean are unacceptable.
3. Trim additional selvage to achieve a color and pattern match at seams. Overlapped seams are not allowed.
4. Do not double cut seams on wall unless specified.
5. If double cutting on the wall is necessary, place a three inch strip of Type I wallcovering under pasted edge.
   a. Do not cut into wall surface.
   b. After cutting, remove strip and excess adhesive from seam before proceeding to next seam.
   c. Smooth down seam in adhesive for tight bond and joint.

I. Trim strip-matched patterns, which are not factory pre-trimmed.

J. Inside Corners:

1. Wrap wallcovering around corner.
2. Do not seam within 50 mm (2 inches) of inside corners.
3. Double cut seam.

K. Outside Corners:

1. Wrap wallcovering around corner.
2. Do not seam within 150 mm (6 inches) of outside corners.
3. Double cut seam.

PATCHING

A. Replace surface damaged wallcovering in a space as specified for new work:

1. Replace full height of surface.
2. Replace from break in plane to break in plane when same batch or run is not used. Double cut seams.
3. Adjoining differential colors from separate batches or runs are not acceptable.

B. Correct loose or raised seams with adhesives to lay flat with tight bonded joint as specified for new work.

CLEANING AND INSTALLING TEMPORARY REMOVED ITEMS

A. Remove adhesive from wallcovering as work proceeds.

B. Remove adhesives where spilled, splashed or splattered on wallcoverings or adjacent surfaces in a manner not to damage surface from which it is removed.

C. Reinstall previously removed electrical outlet and switch plates, mechanical diffusers, escutcheons, registers, surface hardware, fittings and fastenings.

END OF SECTION 09721

09900 PAINTING

GENERAL

Submittals: Prior to beginning work, Architect will furnish color chips for surfaces to be painted. In addition to manufacturer's data, application instructions, and label analysis for each coating material, submit samples for Architect's review of color and texture only. Resubmit samples if requested until required sheen, color and texture is achieved.

On 12" x 12" hardboard, provide 2 samples of each color and material, with texture to simulate finish conditions.

PART 2 - SCOPE

Description of Work Painting and finishing of interior and exterior items and surfaces, unless otherwise indicated.

Includes field painting of bare and covered pipes and ducts (including color coding), and hangers, exposed steel and iron work, and primed metal surfaces of equipment installed under mechanical and electrical work.

Paint exposed surfaces, except as otherwise indicated, whether or not colors are designated. If not designated, colors will be selected by Architect from standard colors available for the coatings required.

Work Not included: Unless otherwise indicated, shop priming of ferrous metal items and fabricated components are included under their respective trades. Pre-finished items, such as metal toilet partitions, acoustic material and the like, are not included. Unless otherwise indicated, painting not required on surfaces of concealed areas except for piping, equipment and other such items within the concealed spaces. Finished metals such as anodized aluminum, stainless steel, bronze, and similar metals will not be painted. Do not paint any moving parts of operating units, or over any equipment identification, performance rating, name or nomenclature plates or code-required labels.

Delivery and Storage: Deliver materials to job site in new, original, and unopened containers bearing manufacturer's name, trade name, and label analysis. Store where indicated in accordance with manufacturer's instructions.

Job Conditions: Do not apply paint in snow, rain, fog or mist or when relative humidity exceeds 85%. Do not apply paint to damp or wet surfaces.

Protection: Protect work of other trades. Correct any painting related damages by cleaning, repairing or replacing, and refinishing, as directed by Architect.

Co-ordination: Provide finish coats which are compatible with prime paints used. Provide barrier coats over incompatible primers where required. Notify Architect in writing of anticipated problems using specified coatings with substrates primed by others.

Surface Preparation: Perform preparation and cleaning procedures in strict accordance with coating manufacturer's instructions for each substrate condition.

Remove hardware and accessories, machined surfaces, plates, lighting fixtures and similar items in place and not to be finish-painted or provide surface-applied protection. Reinstall removed items and remove protective coverings at completion of work.

Seal wood required to be job-painted. Prime edges, ends, face, undersides and backsides of counters, cases, cabinets, counters, etc. Use spar varnish for backpriming where transparent finish is required.

Backprime interior paneling only where masonry, plaster, or other wet wall construction occurs on backside.

Seal tops, bottoms, and cut-outs of wood doors with heavy coat of varnish or similar sealer immediately upon delivery to job.

Clean ferrous surfaces which are not galvanized or shopcoated. Remove oil, grease, dirt, loose mill scale and other foreign substances by solvent or mechanical cleaning. Touchup shop-applied prime coats wherever damaged.

Clean galvanized surfaces free of oil and surface contaminants with non-petroleum based solvent.

Material Preparation: Mix, prepare, and store painting and finishing materials in accordance with manufacturer's directions.

APPLICATION

Apply painting and finishing materials in accordance with manufacturer's directions. Use applicators, and techniques best suited for materials and surfaces to which applied.

Apply additional coats when undercoats, stains or other conditions show through final paint coat, until paint film is of uniform finish, color and appearance.

Paint surfaces behind movable equipment and furniture same as similar exposed surfaces. Paint surfaces behind permanently fixed equipment or furniture with prime coat only before equiPment is installed.

Paint interior surfaces of ducts, where visible through registers or grilles, flat, non-specular black.

Paint back sides of access panels, and removable or hinged covers to match exposed surfaces.

Finish exterior doors on tops, bottoms and edges same as exterior faces, unless otherwise indicated.

Sand lightly between succeeding enamel or varnish coats.

Omit first coat (primer) on metal surfaces which have been shop-primed and touch-up painted, unless otherwise specified.

Apply prime coat to material which is required to be painted or finished, and which has not been prime coated by others.

Apply each material at not less than the manufacturer's recommended spreading rate, to provide a total dry film to thickness of not less than 4.0 mils for entire coating system of prime and finish coats for 3-coat work.

Provide a total dry film thickness of not less than 2.5 mils for entire coating system of prime and finish coat for 2-coat work.

Completed Work: Match approved samples for color, texture and coverage. Remove, refinish or repaint work not in compliance with specified requirements.

MATERIALS

Manufacturer: Subject to compliance with requirements, provide products of one of the following:

Devoe & Reynolds Co. (Devoe)
Glidden Coatings and Resins, Division of SCM Corp. (Glidden)
Benjamin Moore & Co. (Moore)
PPG Industries, Pittsburg Paints (pittsburg)
Pratt & Lambert (P&L)
The Sherwin-Williams Co. (S-W)

Material Quality: Provide best quality grade of various types of coatings as regularly manufactured by acceptable paint materials manufacturers. Materials not displaying manufacturers identification as a standard, best-grade product will not be acceptable.

PAINTING SCHEDULE:

	Surface Primer	First Coat	Second Coat
Exterior:			
Factory primed metals	Spot primer touch-up	Exterior met enamel,semi- gloss	Exterior metal enamel,semi-gloss
Galvanized metals	Galvanized metal primer	Exterior met enamel,semi- gloss	Exterior metal enamel,semi-gloss
Wood doors & frames	Factory sanded & sealed	Exterior wood trim, semi- gloss	Exterior wood trim enamel, semi-gloss
Concrete Masonry Units	Interior/Exterior Block filler	Exterior Acrylic latex,semi- gloss	Exterior Acrylic latex,semi-gloss
Ferrous metal	Rust-inhibitive primer	Exterior trim enamel,semi-gloss	Exterior trim enamel, semi-gloss
Interior:			
Softwood frames doors & trim	Oil base primer enamel undercoat	Enamel Semi-gloss	Enamel Semi-gloss
Metal surfaces	Primer touch-up	Enamel Semi-gloss	Enamel Semi-gloss
Concrete Masonry Units	Interior/Exterior Block filler	Exterior Acrylic latex,semi- gloss	Exterior Acrylic latex,semi-gloss
Taped & texturedLatex wall gypsum board ceiling	Latex paint primer	Latex paint, semi-gloss	semi-gloss
Plywood Soffit gypsum board ceiling @ toilets/storage	Alkyd enamal sealed or self priming finish coat	Industrial enamel	Industrial, enamel semi-gloss
Taped & texturedLatex wall gypsum board	Polyester primer,	Polyester epoxy	epoxy

ceiling @ kitchen

Plywood or softwood Acoustical ceilings	Sanding sealer or factory primed one coat vinyl acoustical wel-cote course texture	Enamel Semi-gloss	Enamel Semi-gloss

END OF SECTION 09900
END OF DIVISION 9

DIVISION 10 SPECIALTIES

10440 ARCHITECTURAL SIGNAGE

SCOPE

Building plaque and Building identification, including anchors.

MATERIALS

A. Building Plaque: Furnish and install 18" x 24" aluminum plaque as manufactured by Southwell Company, San Antonio, Texas (one per project site). Plaque shall contain no more than five hundred (500) letters and thirty (30) lines. Metal Arts, ASI, and Mills Mfg. Company are also approved manufacturers.

1) Cast virgin ingots, F-214 aluminum alloy. Casting shall be free of pits and gas holes and all letters shall be sharp and hand tooled.
2) Single line border. Border and faces of raised leners are to be satin finish and plaque background to be leatherette texture. Background shall be sprayed with black acrylic lacquer. Plaque shall be chemically cleaned and etched and treated with alodine. Two coats of clear acrylic lacquer shall be sprayed on completed plaque.
3) Letter style shall be Helvetica.
4) Plaque shall be mounted on masonry wall with concealed fastening.
5) Architect will furnish plaque design and general layout. Contractor will furnish rubbing of actual pattern for owner's approval prior to casting.

B. Dimensional Letters:

1) Allow for 34 letters as selected by Architect; Helvetica medium, 8" height, 3/4" thickness, medium bronze finish as manufactured by Southwell, Metal Arts and Mills Mfg. Company are also approved manufacturers.

2) Letters shall be mounted with concealed anchors.

C. Graphics: In addition to building plaque, dimensional letters and signage outlined in detail book, allow $1,000.00 for purchase of graphics and directional signage. Graphics will be selected by owner. In addition to the allowance, contractor shall include his overhead and profit and installation of graphics in base bid.

INSTALLATION

All architectural signage items shall be securely mounted with first quality anchors; mechanical mounting with sheet metal/wood screws. full threaded/ one-way theft resistant. Mount level and square to surrounding surfaces. Location as directed by Architect.

END OF SECTION 10440

DIVISION 12 FURNISHINGS

12390 KITCHEN CABINETS

Kitchen Cabinet Standard: Comply with ANSI A161.1.

Provide "Certified Cabinet" seal, of the Kitchen Cabinet Manufacturers Association (KCMA), affixed to each unit in a semi-concealed location of each unit, evidencing compliance with above standard.

Countertop Standard: ANSI A161.2.

Cabinet Hardware: Comply with ANSI A156.9 as applicable to the work indicated.

Provide style and finish of cabinet hardware which is cabinet manufacturer's standard for the required cabinet style and finish.

Sizes, Shapes and Types: Provide the sizes and types of units as shown, complete with drawers, doors, shelves, compartments for appliances and fixtures.

Base Units: Except as otherwise indicated, nominal 24" depth x height required for 36" height of finished counter-top.

Over-Counter Wall Units: Except as otherwise indicated, nominal 12" depth x height required for top to be 7'-0" above floor.

Full-Height Units: Except as otherwise indicated, match depth of base units and height of wall units.

Product/Manufacturer: Provide the following or approved equal:

Manufacturer: Cardell/Arrowwood, Millenia Series, 15443 Capital Port, San Antonio, Texas 78249.

Product: "Oakbrook", solid wood fronts kitchen cabinets, with stained "Pearl" finish.

Counter Top: High-pressure plastic laminate on particleboard (3/4"), with built-up edges (1-1/2") and integral back-splash (to bottom of wall cabinets above); 0.050" thick general purpose plastic laminate, except 0.042" thick wherever post-forming is required; low gloss finished white except as otherwise indicated or selected by Architect. Finish exposed edges.

Construction: Continuous sheet (post-formed) with waterfall and-cove back-splash and no-drip bull-nose edge.

Installation: Anchor cabinet units securely in place with concealed (when doors and drawers are closed) fasteners, anchored into structural support members of wall construction. Comply with manufacturer's instructions and recommendations for supportof units. Use steel screws for anchoring cabinets to wall.

Counter Tops: Attach counter tops securely to base units. Spline and glue joints in counter tops; provide concealed mechanical clamping of joint. Provide cut-outs for fixtures and appliances as indicated; smooth cut edges and coat with waterproof coating or adhesive.

Complete hardware installation and adjust doors and drawers for proper operation.

END SECTION 12390
END OF DIVISION12

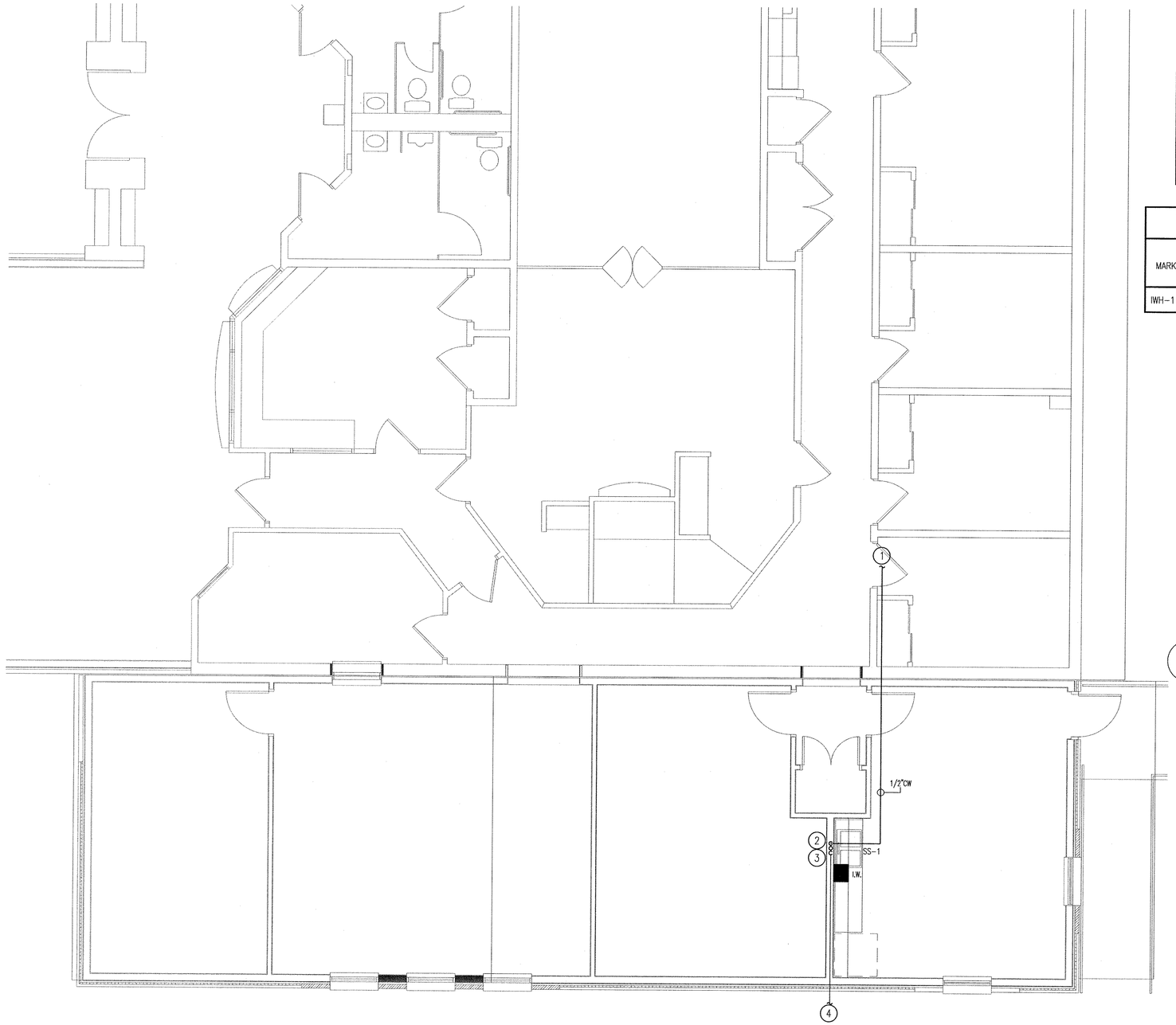

1 PLUMBING PLAN
SCALE: 1/4"=1'

PLUMBING FIXTURE CONNECTION SCHEDULE						
MARK	FIXTURE	CW	HW	W	V	REMARKS
SS-1	LAVATORY STAINLESS STEEL	1/2"	1/2"	2"	2"	ELKAY MODEL NO. CR4322, STAINLESS STEEL SELF-RIMMING SINK, FAUCET: AMERICAN STANDARD MODEL 2021.600X WITH CERAMIC DISK CARTRIDGE, CHROME PLATED, SINGLE LEVER, POST MOUNT, CIRCULAR BASE 8" SWING SPOUT WITH SWIVELSPRAY AERATOR WITH LK-35 DUO-STRAINER WITH 1-1/2" TAILPIECE. MCGUIRE MODEL NO. 2165 LK, 1/2" SUPPLIES WITH LOOSE KEY STOPS AND PUSH-IN CAPS COVERS AND MCGUIRE MODEL NO. 8912, 1-1/2" CHROME PLATED P-TRAP WITH EXCUTCHEON PLATE.

WATER HEATER SCHEDULE									
MARK	STORAGE GALLONS	RECOVERY TIME IN MINUTES	TEMP. RISE	FUEL					REMARKS
				GAS	ELECTRICAL				
				CFH	VOLT	PHASE	HERTZ	WATTS	
IWH-1	2.5	25.0	90°		120	1	60	1200	EeMAX MODEL #EMT2.5

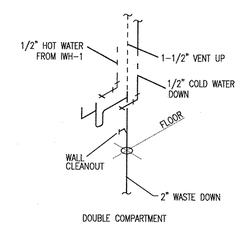

2 RISER – SINK
NOT TO SCALE

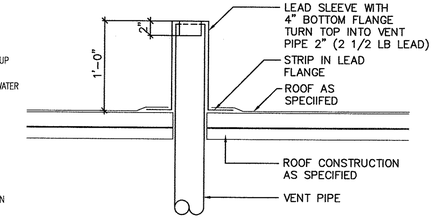

3 VENT THRU ROOF
NO SCALE

KEYED NOTES: (THIS SHEET ONLY)

1. EXTEND NEW 1/2"CW, FROM ADDITION TO NEAREST COLD WATER LINE ABOVE EXISTING CEILING.
2. 1/2" COLD WATER DOWN; 2" WASTE DOWN AND 2" VENT UP THRU ROOF.
3. 1/2" HOT WATER UP FROM INSTATANEOUS WATER HEATER.
4. EXTEND 2" WASTE TO EXISTING SANITARY SEWER, MAKE ALL CONNECTIONS.

GENERAL NOTES:

1. SANITARY SEWER PIPING 3" AND SMALLER TO BE INSTALLED AT A 2% SLOPE AND SANITARY SEWER PIPING 4" AND LARGER TO BE INSTALLED AT A 1% SLOPE.

2. CONTRACTOR SHALL COORDINATE ALL PLUMBING WORK WITH EXISTING CONDITIONS AND ALL OTHER TRADES.

3. CONTRACTOR SHALL INSTALL P.D.I. SHOCK ARRESTORS SIZER "A" WITH AN ACCESS PANEL AT EACH INDIVIDUAL PLUMBING FIXTURE.

4. CONTRACTOR SHALL SAW CUT THE EXSITING FLOOR SLAB AS REQUIRED TO INSTALL NEW WASTE PIPING AS INDICATED. UNDER NO CIRCUMSTANCES SHALL ANY EXISTING STRUCTURAL MEMBERS BE CUT WITH OUT THE WRITTEN PERMISSION OF A REGISTERED STRUCTURAL ENGINEER IN THE STATE OF TEXAS.

STATE OF TEXAS
ROSARIO R. CARRILLO
26358
REGISTERED
PROFESSIONAL ENGINEER
02-15-12

RC ENGINEERING, INC.
F-9785

RCE CONSULTING ENGINEERS.
5323 McCullough Ave
San Antonio, Texas 78212
Phone (210) 734-6004
Fax (210) 736-2058

HICKEY PEÑA & ARCHITECTS
ARCHITECTS PLUS, INC.

All matters contained hereon, including but not limited to drawings, written matter, ideas, and concepts, are and shall remain the property of A+INC. and H/P ARCHITECTS. They may not be reproduced, reused or modified in any way without prior written approval from and appropriate compensation paid to ARCHITECTS PLUS, INC. and HICKEY PEÑA ARCHITECTS.

JUSTICE OF THE PEACE PRECINCT 4
ADDITION AND RENOVATION
COUNTY OF WEBB
CITY OF LAREDO

Drawn by: M.A.C.
Checked: R.R.C.
Approved: R.R.C.
Date: 11/21/11
Revisions:

Job # 12-103

Drawing Name:
PLUMBING

P-1

SHT. 1. OF 1.

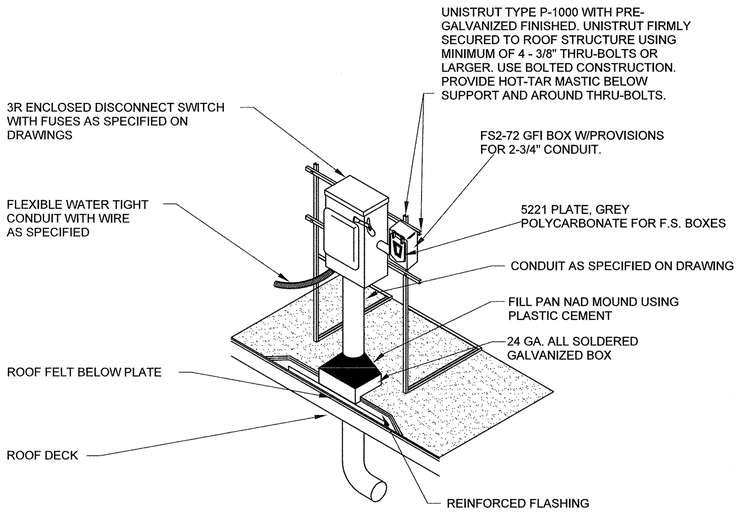

1 ROOFTOP MOUNTED DISCONNECT SWITCH WITH GFI OUTLET
NTS

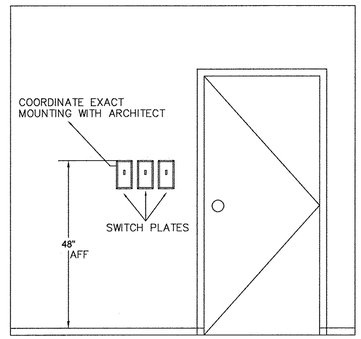

2 SWITCH PLATE LOCATION DETAIL
SCALE: N.T.S.

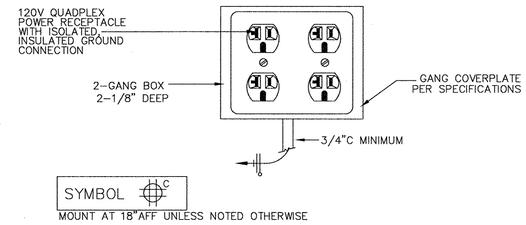

3 WALL MOUNTED QUADPLEX RECEPTACLE
SCALE: N.T.S.

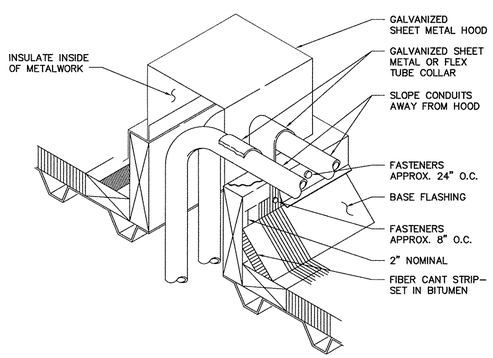

4 ROOF PENETRATION DETAIL
SCALE: N.T.S.

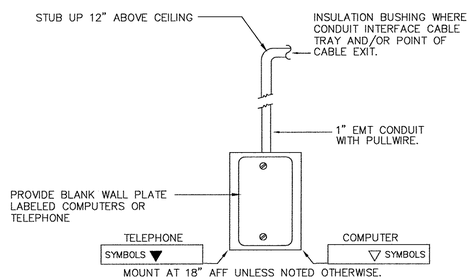

5 TELEPHONE/COMPUTER DETAIL
SCALE: N.T.S.

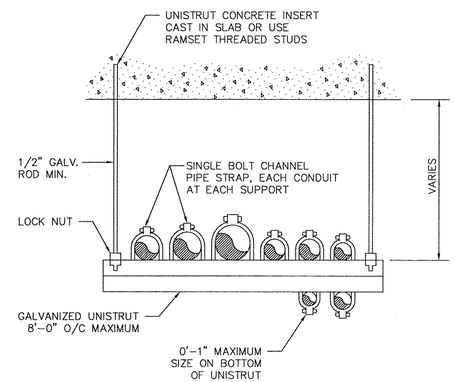

6 SUPPORT DETAIL FOR MULTIPLE CONDUIT HORIZONTAL RUNS
SCALE: N.T.S.

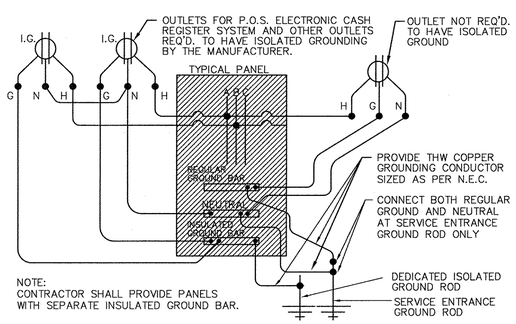

8 ISOLATED GROUND SCHEMATIC DIAGRAM
SCALE: N.T.S.

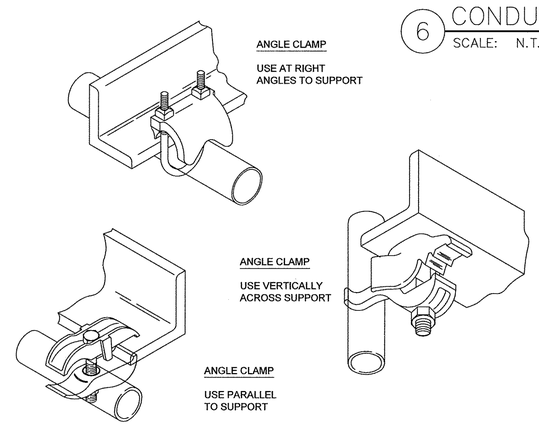

9 SUPPORT DETAIL FOR CONDUIT RUNS
SCALE: N.T.S.

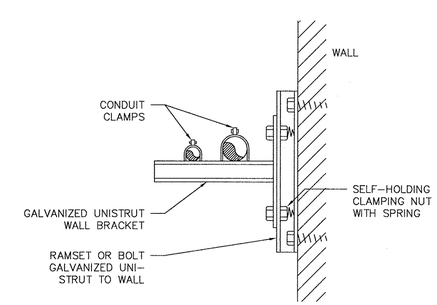

10 CONDUIT CLAMPS - TYPICAL
SCALE: N.T.S.

RCE CONSULTING ENGINEERS.
6383 McCullough Ave
San Antonio, Texas 78212
Phone (210) 734-8004
Fax (210) 736-2058
STATE OF TEXAS ROSARIO R. CARRILLO 26358 REGISTERED PROFESSIONAL ENGINEER 02-15-12
RC ENGINEERING, INC.
F-9785

HICKEY PEÑA & ARCHITECTS
ARCHITECTS PLUS, INC.

All matters contained hereon, including but not limited to drawings, written matter, ideas, and concepts, are and shall remain the property of A+INC. and H/P ARCHITECTS. They may not be reproduced, reused or modified in any way without prior written approval from and appropriate compensation paid to ARCHITECTS PLUS, INC. and HICKEY PEÑA ARCHITECTS.

JUSTICE OF THE PEACE PRECINCT 4
ADDITION AND RENOVATION
COUNTY OF WEBB
CITY OF LAREDO

Drawn by: M.A.C.
Checked: R.R.C.
Approved: R.R.C.
Date: 11/21/11
Revisions:

Job # 12-103

Drawing Name:
DETAILS

E-3
SHT. 3. OF 3.

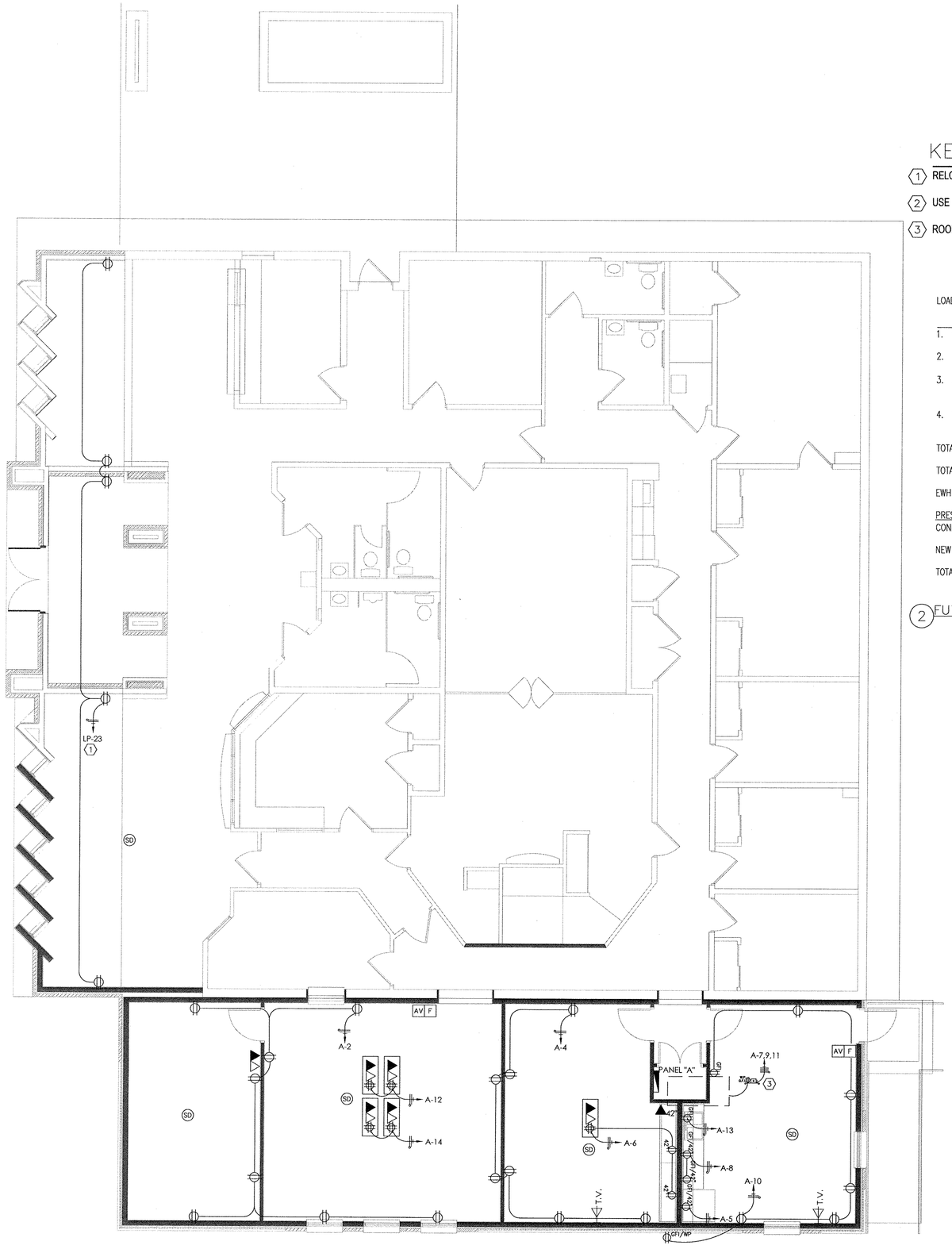

1 ELECTRICAL POWER
SCALE: 3/16"=1'

KEYED NOTES: DEMO ELECTRICAL

1. RELOCATED RECEPTS, EXISTING CIRCUIT
2. USE EXISTING CIRCUIT FOR NEW RECEPTS.
3. ROOF MTD 60A,260V, N.F. HEAVY DUTY DISC. W/S.N. FOR RTU-2

LOAD DESCRIPTION	CONNECTED KVA	DIVERSITY	DEMAND KVA
1. LIGHTING	2.1KVA	1.25	2.63
2. RECEPTACLES	8.2KVA		8.2
3. A/C (HEATING/COOLINIG)	18.6		18.6
4. WATER HEATER	1.2		1.2
TOTAL KVA			30.63

TOTAL AMPS. = 85A

EWH STORAGE – 2.5GAL 120V, 1.2KVA EMAX MODEL EMT2.5

PRESENT MDP 400A
CONNECTED LOAD = 292A (105KVA)

NEW LOAD = 31KVA

TOTAL NEW CONNECTED LOAD = 136KVA

I = 377.9

2 FUTURE KITCHEN ELECTRICAL LOAD CALCULATIONS:

PANEL: A 3 ø, 4 w, 120/208 V NEMA: 1 ____ A MAIN BUS
LOCATION: CLOSET NEW ADDITION MOUNTING: SURFACE ____ A MCB ____X A MLO

CIRC NO	EQUIPMENT	KVA A	KVA B	KVA C	TRIP	TRIP	KVA C	KVA B	KVA A	EQUIPMENT	CIRC NO
1	12A LIGHTS	1.2			20	20			1.4	8 RECEPTS.	2
3	6A. , 2X 1C LIGHTS		.9		20	20		1.4		8 RECEPTS.	4
5	REFRIG.			1.2	20	20	1.1			2 RECEPTS, 1 QUAD	6
7		6.2			50	20			.4	2 RECEPTS	8
9	RTU-2		6.2			20		1.1		6 RECEPTS.	10
11				6.2	3	20	1.4			2 QUADS	12
13	IWH-1	1.2			20	20			1.4	2 QUADS	14
15	NEW LIGHTS		1.2		20						16
17											18
19											20
21											22
23											24
25											26
27											28
29											30
31											32
33											34
35											36
37											38
39											40
41											42
TOTAL LOAD PER PHASE				12						TOTAL LOAD PER PHASE	

TOTAL PANEL LOAD A + B + C = _____

CONNECTED kVA		DIVERSITY		DESIGN kVA	DESIGN AMPS
LIGHTING (L) 2.1	X	1.25	3	2.63	
AIR COND (A)	X		5		
HEATING (H) 18.6	X	1.00	5	18.6	
RECEPTACLES (R) 8.2	X	1.00	1	8.2	
GENERAL POWER (G)	X				
MOTORS (M)	X		2		
KITCHEN (K)	X		4		
OTHER (O) EWH 1.2	X	1.00		1.2	
SUB-TOTAL	X			30.03	
RESERVE/SPACE CAPACITY	%			31	
		TOTAL		31	85A

NOTES
08 NEC 220-13 1
08 NEC 430-24 2
08 NEC 220-11 3
08 NEC 220-20 4
08 NEC 220-21 5

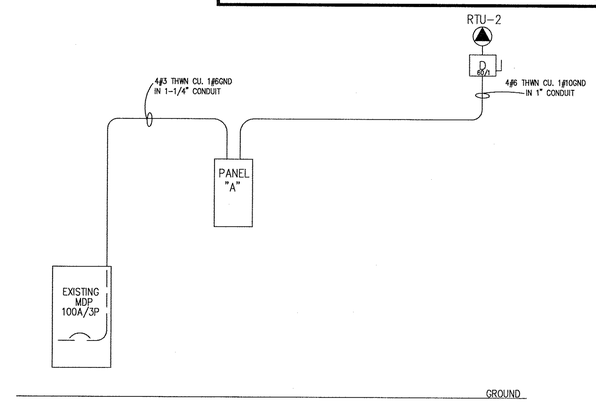

3 ELECTRICAL POWER DIST. DIAGRAM
SCALE: NONE

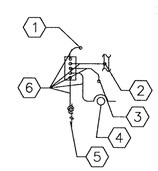

KEYED NOTES: GROUNDING

1. BONDED TO MDP ENCLOSURE
2. BOND TO STEEL STRUCTURAL COLUMN
3. BOND TO 5/8" REBAR EMBEDDED IN CONCRETE FOUNDATION
4. BOND TO STEEL WATER PIPE
5. 5/8" COPPER CLAD STEEL ROD PER NEC
6. #3/0 GND IN 3/4" CONDUIT

4 ELECTRICAL POWER GROUNDING DETAIL
SCALE: NONE

STATE OF TEXAS
ROSARIO R. CARRILLO
26358
02-15-12
PROFESSIONAL ENGINEER

RCE CONSULTING ENGINEERS.
5323 McCullough Ave
San Antonio, Texas 78212
Phone (210) 734-6004
Fax (210) 736-2058

RC ENGINEERING, INC.
F-9785

HICKEY PEÑA & ARCHITECTS
ARCHITECTS PLUS, INC.

All matters contained hereon, including but not limited to drawings, written matter, ideas, and concepts, are and shall remain the property of A+INC. and H/P ARCHITECTS. They may not be reproduced, reused or modified in any way without prior written approval from and appropriate compensation paid to ARCHITECTS PLUS, INC. and HICKEY PEÑA ARCHITECTS.

JUSTICE OF THE PEACE PRECINCT 4
ADDITION AND RENOVATION
COUNTY OF WEBB
CITY OF LAREDO

Drawn by: M.A.C.
Checked: R.R.C.
Approved: R.R.C.
Date: 11/21/11
Revisions:
05/22/12

Job # 12-103

Drawing Name:
POWER

E-2

SHT. 2. OF 3.

EXISTING LIGHTING

LIGHTING FIXTURE SCHEDULE				
MARK	LAMPS	MOUNTING	VOLTAGE	MANUFACTURER & CATALOG NO.
EA	4-F32T8SPX35	RECESSED	120V	METALUX 2GC432A125120EB81
EAE	SAME AS 'A' WITH EMERGENCY BATTERY PACK			
EB	2-F32T8SPX35	RECESSED	120V	METALUX 2GC232A125120EB81
EBE	SAME AS 'B' WITH EMERGENCY BATTERY PACK			
EC	2-F32T8SPX35	SURFACE	120V	METALUX WE232A120EB12
ED	2-F32T8SPX35	SURFACE	120V	METALUX SS232120EB81-WGSS4FT
EF	1-22W DTT	RECESSED	120V	LITHONIA LGF122DTT7RW173120
X1	1-7W LED	SURFACE	120V	LITHONIA LES1R120ELNSD
X2	1-7W LED	SURFACE	120V	LITHONIA LES2R120ELNSD

RETROFIT EXISTING FLUORESCENT FIXTURES, "EA",EB","EC" AND "ED" WITH NEW, 2-LAMP HIGH PERFORMANCE T8'S WITH PREMIUM ELECTRONIC BALLASTS. USE RETROFIT KIT AS RECOMMENDED BY EXISTING FIXTURE MANUFACTURE.

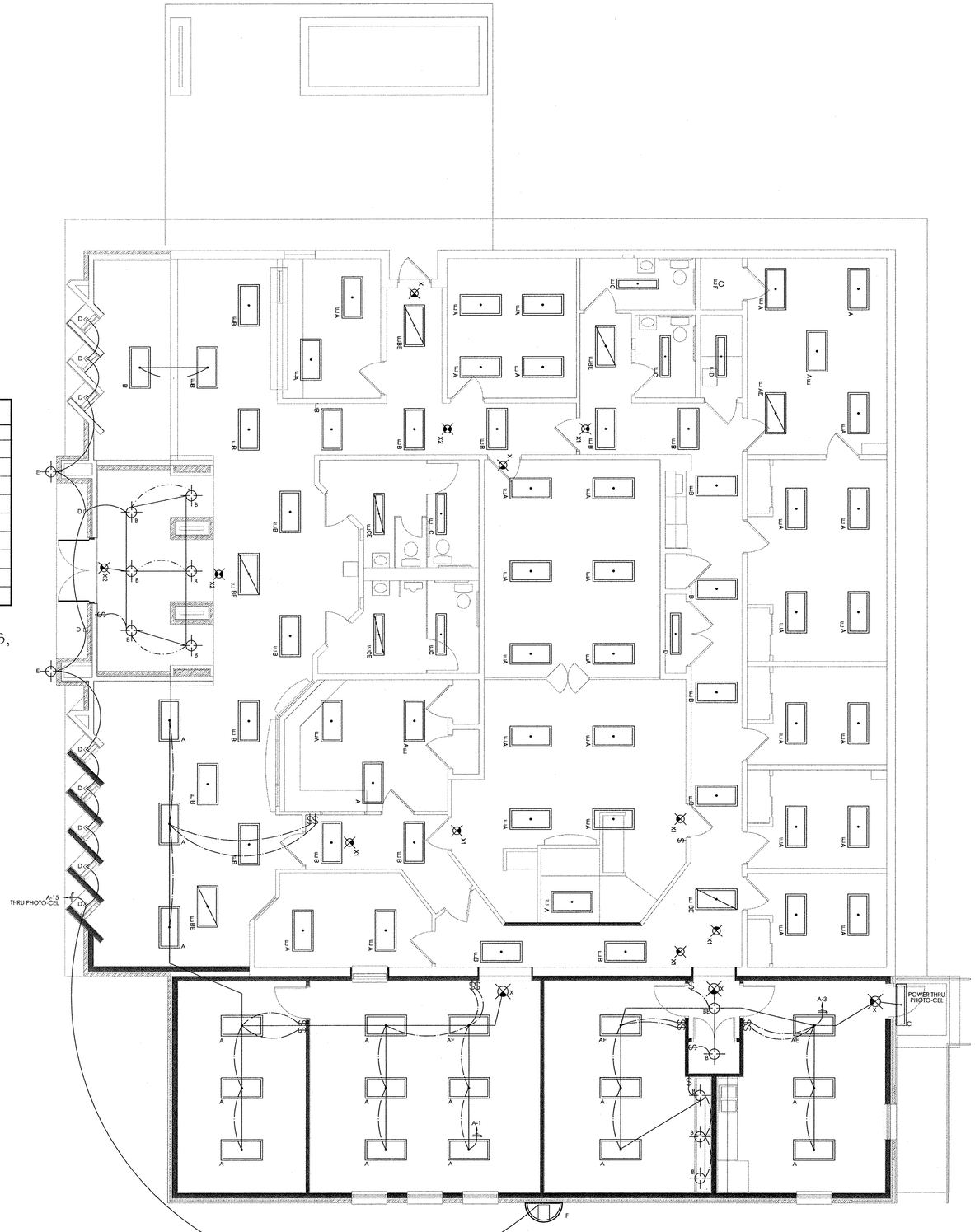

1 ELECTRICAL LIGHTING
SCALE: 3/16"=1'

LIGHTING FOR ADDITION

LIGHTING FIXTURE SCHEDULE				
MARK	LAMP	MOUNTING	VOLTAGE	MANUFACTURER & CATALOG NO.
A	3-HP-T8	RECESSED	120V	METALUX CAT. NO. 2HP3GT-328S-26-1-120-HPT82
AE	SAME AS "A"	EXCEPT WITH EM. BAT. PAK.		
B	26W DTT	RECESSED	120V	HALO CAT. NO. H285EL1CAT.
BE	SAME AS "B"	WITH EM. BAT. PAK.		
C	F21T5	WALL-MTD	120V	LUMINAIRE CAT. NO. AEL36-121-120-CL-BKN-EMB-600R*
D	26W-TRIP. CFL	WALL-PAK	120V	SHARPER CAT. NO. 684-WP-BRONZE
E	52W,CFL	WALL-MTD	120V	INVUE CAT. NO. ENT-52-CF-120V-EB-FT-BZ-CF/EMAB
F	LED	WALL PAK	120V	McGRAW CAT. NO. ISC-B02-LED-120V-GZWB2
X	LED	CEILING MTD	120V	ER44L1WR (RED)

* CONTRACTOR SHALL PROVIDE ACCESSIBLE COMPARTMENT FOR REMOTE LOCATION FOR BALLEST/EMB PAK.

RCE CONSULTING ENGINEERS.
6323 McCullough Ave
San Antonio, Texas 78212
Phone (210) 734-8004
Fax (210) 736-2058

STATE OF TEXAS
ROSARIO R. CARRILLO
26358
REGISTERED
PROFESSIONAL ENGINEER
02-15-12

RC ENGINEERING, INC.
F-9785

HICKEY PEÑA & ARCHITECTS
ARCHITECTS PLUS, INC.

All matters contained hereon, including but not limited to drawings, written matter, ideas, and concepts, are and shall remain the property of A+INC. and H/P ARCHITECTS. They may not be reproduced, reused or modified in any way without prior written approval from and appropriate compensation paid to ARCHITECTS PLUS, INC. and HICKEY PEÑA ARCHITECTS.

JUSTICE OF THE PEACE PRECINCT 4
ADDITION AND RENOVATION
COUNTY OF WEBB
CITY OF LAREDO

Drawn by: M.A.C.
Checked: R.R.C.
Approved: R.R.C.
Date: 11/21/11
Revisions:
05/21/12

Job # 12-103

Drawing Name:
LIGHTING

E-1

SHT. 1. OF 3.

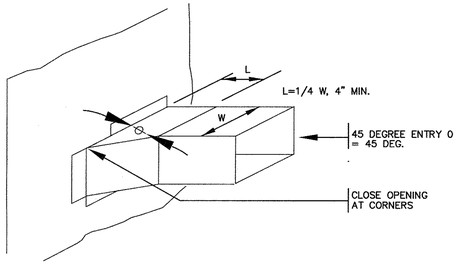

1 TYPICAL DUCTWORK TAP 45 DEG.
SCALE: NOT TO SCALE

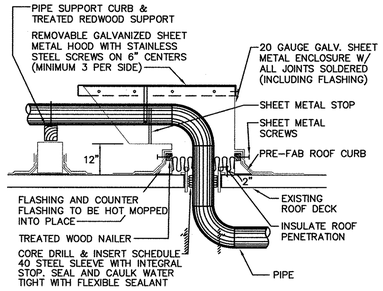

DETAILS.

3. COORDINATE WITH OWNER'S BONDED ROOFER FOR FLASHING & MOPPING IN DETAIL.

2 PIPE ROOF PENETRATION DETAIL
SCALE: NOT TO SCALE

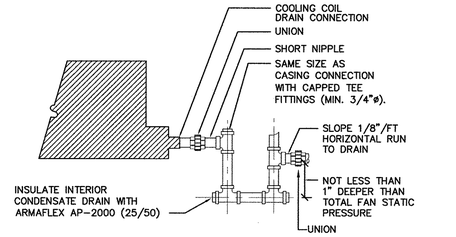

NOTE:
1. MAINTAIN MINIMUM 1" AIR GAP AT DRAIN. RE: PLUMBING.
2. ALL CONDENSATE DRAIN PIPING SHALL BE SCHEDULE 40 GALVANIZED WITH MALLABLE IRON SCREWED FITTINGS.

3 COOLING COIL CONDENSATE DRAIN
SCALE: NOT TO SCALE

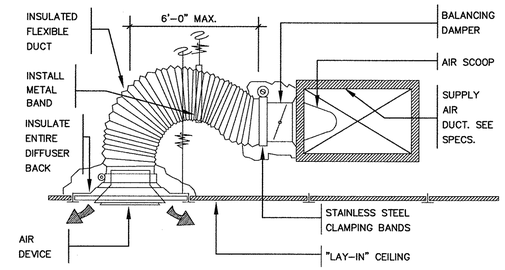

4 TYPICAL FLEXIBLE DUCT TAP
SCALE: NOT TO SCALE

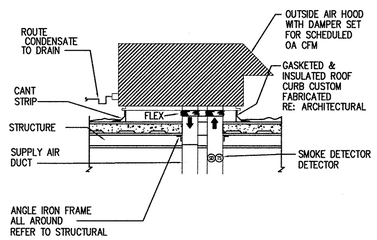

NOTE: ALL CONDENSATE DRAIN PIPING SHALL BE SCHEDULE 40 PVC

6 ROOFTOP MOUNTING DETAIL
SCALE: NOT TO SCALE

ROOF TOP UNIT SCHEDULE

MARK	RTU-2		
NOMINAL TONS	7.5		
MIN. EER	11.2		
SERVES	ADDITION		
SUPPLY AIR (CFM)	2800		
OUTSIDE AIR (CFM)	300		
E.S.P. (IN W.G.)	1.0		
FAN MOTOR (HP)	2.4		
MAX. FAN RPM	1402		
TOTAL (MBH)	67.4		
SENSIBLE (MBH)	54.5		
EAT. (DB/WB) (°F)	78/63		
LAT. (DB/WB) (°F)	55/55		
AMB. TEMP (F°)	105		
GAS HEAT (MBH)	125		
VOLTS/PHASE/HERTZ	208/3/60		
MCA (AMPS)/MOCP	30.5/45		
MANUFACTURER	CARRIER		
MODEL NO.	48TC		
WEIGHT (LBS)	1100		
NOTES	1,2,3		

NOTES:

1.) PROVIDE 7 DAY PROGRAMMABLE THERMOSTAT WITH UNIT.

2.) PROVIDE MOTORIZED OUTSIDE AIR DAMPER WITH UNIT.

3.) PROVIDE CONDENSER COIL HAIL GUARDS.

AIR DEVICE SCHEDULE

MARK	A	B				
MANUFACTURER	TITUS	TITUS				
MODEL	TMSA	50F				
SIZE	AS NOTED	AS NOTED				
TYPE	SUPPLY	RETURN				
NC	25	20				
REMARKS	1,2	1,2				

NOTES:

1.) STEEL CONSTRUCTION.

2.) PROVIDE FRAME FOR MOUNTING AIR DEVICE IN LAY-IN GRID CEILING UNLESS REFLECTED CEILING PLAN INDICATES HARD CEILING. IN AREAS WITH HARD CEILINGS, PROVIDE FRAMES FOR SURFACE MOUNTING. PROVIDE YOUNG REGULATORS AT ALL DAMPERS IN INACCESSIBLE CEILINGS.

GENERAL MECHANICAL NOTES

1. ALL WORK SHALL BE IN ACCORDANCE WITH THE INTERNATIONAL BUILDING CODE, THE INTERNATIONAL MECHANICAL CODE, AND THE OTHER CODES AND ORDINANCES OF THE AUTHORITY HAVING JURISDICTION.
2. DUCT DIMENSIONS INDICATED ARE CLEAR INSIDE DIMENSIONS.
3. ALL RECTANGULAR SUPPLY AND RETURN DUCTS SHALL HAVE TURNING VANES AT EACH 90 DEGREE ELBOW OR TEE.
4. ALL DUCT SHALL BE SHEETMETAL AND SHALL BE INSTALLED WITH 2" FOILFACED FIBERGLASS INSULATION. 1.5" FIBERGLASS DUCTBOARD IS ACCEPTABLE AFTER OWNER'S APPROVAL.
5. ALL DUCTWORK SHALL BE FABRICATED AND INSTALLED AS PER A.S.H.R.A.E. AND S.M.A.C.N.A. STANDARDS.
6. HVAC SYSTEM SHALL BE BALANCED AND TESTED AS REQUIRED TO MEET THE PERFORMANCE AS SCHEDULED ON PLANS AND SPECIFICATIONS.
7. DIFFUSERS SHALL BE MANUFACTURED BY TITUS OR APPROVED EQUAL WITH NECK MINIMUM SIZES AND RATED CFM, AS SHOWN ON DRAWINGS AND SCHEDULES.
8. MOUNT ALL TEMPERATURE SENSORS IN RETURN DUCT.
9. PROVIDE AND INSTALL A STANDARD EFFICIENCY TAKE-OFF W/ VOLUME CONTROL DAMPER ON EACH ROUND SUPPLY BRANCH DUCT SERVING A SUPPLY DIFFUSER/REGISTER. PROVIDE EXTENDED NECK ON BALANCING DAMPER TO ALLOW ACCESS THRU INSULATION.
10. COORDINATE ALL DUCTWORK, GRILLES, AND EQUIPMENT WITH ALL TRADES BEFORE INSTALLING.
11. TRANSITION SUPPLY AND RETURN DUCT FROM UNIT CONNECTION SIZE TO DUCT SIZE SHOWN.
12. PROVIDE AND INSTALL VIBRATION ISOLATORS AS SPECIFIED ON ANY EQUIPMENT WITH MOVING PARTS.
13. ALL UNITS MUST BE INSTALLED LEVEL.
14. MECHANICAL CONTRACTOR TO PROVIDE TO THE PLUMBING CONTRACTOR THE RECOMMENDED A/C MANUFACTURER'S DATA FOR CONDENSATE TRAP. SEE PLUMBING PLANS.
15. PROVIDE CANVAS CONNECTION AT UNIT DUCT CONNECTIONS UNLESS UNIT IS INTERNALLY ISOLATED.
16. SMOKE DETECTORS SHOWN ON MECHANICAL PLANS ARE TO BE PROVIDED UNDER DIVISION 16, AND ARE SHOWN ON THESE SHEETS FOR LOCATION ONLY.
17. INSULATE ALL BACKPANS OF SUPPLY AIR DIFFUSERS WITH FOIL-FACED DUCT WRAP AS SPECIFIED. TAPE SECURELY TO AIR DEVICE.

MECHANICAL SPECIFICATIONS

1. NOSE AND VIBRATION CONTROL

ALL EQUIPMENT INSTALLED BY MECHANICAL CONTRACTOR SHALL BE PROVIDED WITH VIBRATION ISOLATORS, SOUND TRAPS, DUCT LINING, ACOUSTICAL HOUSINGS, ACOUSTICAL LOUVERS, AND OTHER NOISE AND VIBRATION CONTROL APPARATUS REQUIRED TO LIMIT INTRUSION INTO THE ADJACENT SPACES ACCORDINGLY.

A. INTRUSIVE NOISE LEVELS IN ADJACENT SPACES SHALL NOT EXCEED NC-40 WHEN MEASURED IN THESE SPACES.

B. TENANT EQUIPMENT NOSE EMITTED TO THE EXTERIOR SHALL NOT EXCEED 55 DBA IN ANY OCCUPIED EXTERIOR SPACE.

C. MECHANICAL CONTRACTOR SHALL PROVIDE VIBRATION ISOLATION OF DUCTWORK, PIPING AND EQUIPMENT IN ACCORDANCE WITH PRACTICES DESCRIBED IN THE LATEST ASHRAE HANDBOOK SO THAT THE MEASUREMENTS MADE IN ADJACENT SPACES DO NOT EXCEED 5 DECIBELS.

2. FIELD CONDITIONS MAY VARY FROM THOSE SHOWN ON THE DRAWINGS. THE MECHANICAL CONTRACTOR IS REQUIRED TO VISIT THE SITE AND VERIFY FIELD CONDITIONS WHICH MAY AFFECT THE DESIGN AND INSTALLATION BEFORE SUBMITTING A BID.

3. ALL ROOF PENETRATIONS SHALL BE BY LANDLORDS APPROVED ROOF CONTRACTOR ONLY AT TENANT'S EXPENSE.

4. ALL PIPING AND DUCTWORK IS TO BE INSTALLED AS HIGH AS REASONABLY POSSIBLE. NO PENETRATIONS THROUGH STRUCTURAL MEMBERS WILL BE PERMITTED.

5. ALL OPENINGS THROUGH STRUCTURALLY SUPPORTED SLABS MUST BE CORE BORED, SLEEVED, GROUTED, SEALED AND MADE WATERPROOF. SLEEVES, EXCEPT FOR WATER CLOSETS, MUST EXTEND AT LEAST TWO INCHES (2) ABOVE THE FINISHED FLOOR. LOCATION OF ALL FLOOR OPENINGS MUST BE APPROVED BY THE LANDLORD IN WRITING. WATERPROOFING MUST BE INSPECTED AND APPROVED BY THE LANDLORD BEFORE ANY FLOOR MATERIAL IS INSTALLED. MECHANICAL CONTRACTOR IS RESPONSIBLE TO TAKE WHATEVER MEASURES ARE NECESSARY INCLUDING, BUT NOT LIMITED TO, THOSE MEASURES PRESCRIBED BY LANDLORD IN THE EXERCISE OF ITS REASONABLE JUDGMENT TO ASSURE THAT CORE BORING WILL NOT DAMAGE THE LANDLORDS STRUCTURE, CONDUITS, ETC. THE COST OF SUCH TESTS OR REPAIR OF ANY DAMAGE WILL BE BORNE BY THE MECHANICAL CONTRACTOR.

HVAC SPECIFICATIONS

1. WHERE ANY HVAC UNITS, DUCTWORK AN/OR DIFFUSERS, OR OUTLETS ARE PROVIDED BY MECHANICAL CONTRACTOR, M.C. SHALL ENGAGE THE SERVICES OF A CERTIFIED AIR BALANCE CONTRACTOR TO ADJUST AND COMPLETELY BALANCE GENERAL CONTRACTORS PORTION OF THE SYSTEM TO DESIGN AIR AND CHILLED WATER QUANTITIES. GENERAL CONTRACTOR SHALL PROVIDE TO LANDLORD A COPY OF THE CERTIFIED BALANCE REPORT SHOWING DESIGN AND MEASURED QUANTITIES, STATIC PRESSURE, FAN MOTOR RPM, MOTOR CURRENT AND EXHAUST QUANTITIES.

A. CONSTRUCTION

ALL DUCTWORK SHALL BE FABRICATED FROM GALVANIZED SHEET STEEL IN ACCORDANCE WITH THE BEST RECOMMENDED PRACTICES OF THE AMERICAN SOCIETY OF HEATING, REFRIGERATION AND AIR CONDITIONING ENGINEERS (ASHRAE) AND IN STRICT COMPLIANCE WITH ALL THE APPLICABLE STANDARDS OF THE SHEET METAL AND AIR CONDITIONING CONTRACTORS NATIONAL ASSOCIATIONS (SMACNA) LATEST EDITIONS.

BRANCHES FROM THE MAIN LOW VELOCITY TRUNK DUCTWORK SHALL BE FURNISHED WITH SPLITTER DAMPERS OR SIMILAR BALANCING DEVICES IN THE GENERAL ACCORDANCE WITH THE LATEST STANDARDS OF THE ASSOCIATED AIR BALANCE COUNCIL. ACCESS PANELS ARE REQUIRED FOR THESE DEVICES IN THE CEILINGS.

B. DUCT INSULATION

ALL SUPPLY AND OUTSIDE AIR DUCTWORK SHALL BE INSULATED WITH 2" THICK GLASS FIBER INSULATION WITH FOIL VAPOR BARRIER.

C. AIR DISTRIBUTION DEVICES:

AIR DISTRIBUTION DEVICES SHALL BE GRILLES OR CEILING DIFFUSERS INSTALLED AS REQUIRED TO ACHIEVE DRAFT FREE AIR DISTRIBUTION IN ACCORDANCE WITH GOOD ENGINEERING PRACTICE. DIFFUSERS OR GRILLES SHALL HAVE LOCKABLE, INDIVIDUAL MANUAL VOLUME CONTROL DEVICES.

3. PIPING SYSTEMS

ALL PIPING SYSTEMS MUST BE COMPATIBLE WITH THE TYPE OF MATERIALS USED BY THE LANDLORD AND SHALL COMPLY WITH THE FOLLOWING REQUIREMENTS:

A. PIPING SUPPORTS AND VALVES SHALL BE SPECIFIED UNDER PLUMBING SPECIFICATIONS UNLESS OTHERWISE NOTED.

4. ROOFTOP UNITS

ROOFTOP UNIT SHALL COMLY WITH THE FOLLOWING STANDARDS ASHRAE15, ASHRAE 90.1 2004, ANSI Z223.1, NFPA 70, ARTICLE 100 OF NEC, IAQ, ARI 360, AND ARI 270.

STATE OF TEXAS
ROSARIO R. CARRILLO
26358
REGISTERED
PROFESSIONAL ENGINEER
02-15-12

RCE CONSULTING ENGINEERS.
5323 McCullough Ave
San Antonio, Texas 78212
Phone (210) 734-0004
Fax (210) 706-2008

RC ENGINEERING, INC.
F-9785

HICKEY PEÑA & ARCHITECTS
ARCHITECTS PLUS, INC.

All matters contained hereon, including but not limited to drawings, written matter, ideas, and concepts, are and shall remain the property of A+INC. and H/P ARCHITECTS. They may not be reproduced, reused or modified in any way without prior written approval from and appropriate compensation paid to ARCHITECTS PLUS, INC. and HICKEY PEÑA ARCHITECTS.

JUSTICE OF THE PEACE PRECINCT 4
ADDITION AND RENOVATION
COUNTY OF WEBB
CITY OF LAREDO

Drawn by: M.A.C.
Checked: R.R.C.
Approved: R.R.C.
Date: 11/21/11
Revisions:

Job # 12-103

Drawing Name:
SCHEDULES

M-2

SHT. 2. OF 2.

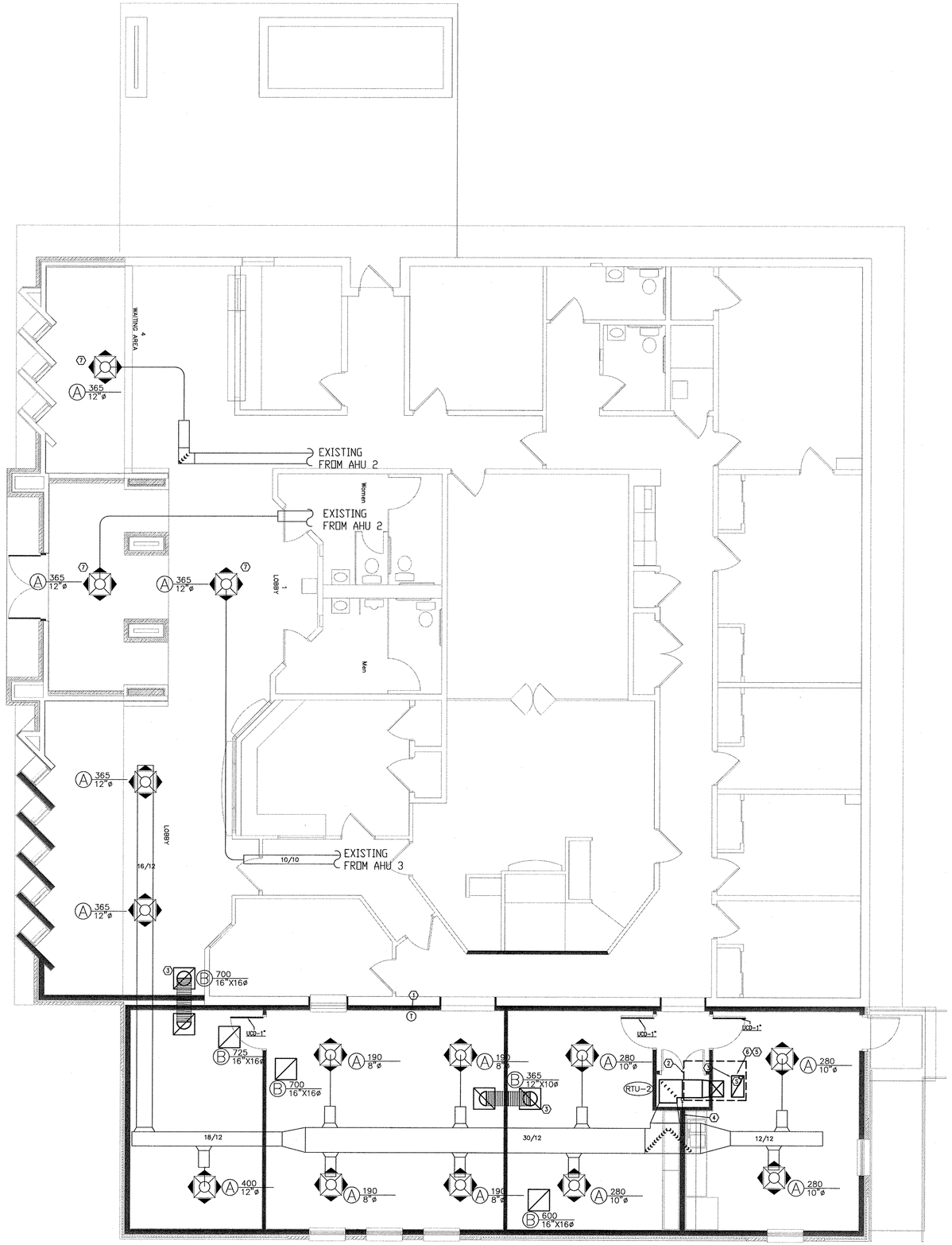

1 HVAC PLAN
SCALE: 3/16"=1'

GENERAL NOTES:

1. ALL WORK SHALL BE IN ACCORDANCE WITH THE INTERNATIONAL BUILDING CODE, INTERNATIONAL MECHANICAL CODE, AND THE OTHER CODE AND ORDINANCES OF THE AUTHORITY HAVING JURISDICTION.
2. DUCT DIMENSIONS INDICATED ARE CLEAR INSIDE DIMENSIONS.
3. ALL RECTANGULAR SUPPLY AND RETURN DUCTS SHALL HAVE TURNING VANES AT EACH 90 DEGREE ELBOW OR TEE.
4. ALL DUCT SHALL BE SHEET METAL AND SHALL BE INSTALLED WITH 2" FOILFACED FIBERGLASS INSULATION.
5. ALL DUCTWORK SHALL BE FABRICATED AND INSTALLED AS PER THE LATEST EDITIONS OF ASHRAE, AND SMACNA STANDARDS.
6. HVAC SYSTEM SHALL BE BALANCED AND TESTED AS REQUIRED TO MEET THE PERFORMANCE AS SCHEDULED ON PLANS.
7. DIFFUSERS SHALL BE MANUFACTURED BY TITUS OR APPROVED EQUAL WITH NECK MINIMUM SIZES AND RATED CFM, AS SHOWN ON DRAWINGS AND SCHEDULES.
8. COORDINATE ALL DUCTWORK, GRILLES, AND EQUIPMENT WITH ALL TRADES BEFORE INSTALLING.
9. TRANSITION SUPPLY AND RETURN DUCT FROM UNIT CONNECTION SIZ TO DUCT SIZE SHOWN.
10. PROVIDE CANVAS CONNECTION AT UNIT DUCT CONNECTIONS.
11. CONTRACTOR SHALL VERIFY THE CONFIGURATION OF THE EXISTING ROOF STRUCTURE AND AVAILABLE CLEARANCE FOR THE NEW MECHANICAL SYSTEMS PRIOR TO COMMENCEMENT OF WORK.
12. THESE DRAWINGS ARE SCHEMATIC IN NATURE. SOME MECHANICAL EQUIPMENT AND DUCTS MAY NOT BE DRAWN TO SCALE. CONTRACTOR SHALL PERFORM FIELD MEASUREMENTS TO DETERMINE THE NECESSARY CONFIGURATION OF THE MECHANICAL SYSTEMS.
13. CONTRACTOR SHALL FIELD VERIFY EXISTING JOB SITE CONDITIONS DURING THE BIDDING PERIOD, SO THEY WILL HAVE DISCOVERED THE FULL SCOPE OF WORK INVOLVED WITH THE MODIFICATION OF THIS EXISTING SPACE. THE SCOPE OF THE WORK SHALL INCLUDE ALL MATERIALS AND DUCTWORK REQUIRED FOR A COMPLETE INSTALLATION INCLUDING DEVICES, EQUIPMENT, OR APPARATUS WHICH MUST BE ROUTED, RELOCATED, OR REMOVED EITHER TEMPORARILY OR PERMANENTLY, OR WHICH MUST BE PROVIDED TO ACCOMMODATE THE INDICATED REMODELING. NOT ALL EXISTING CONDITIONS ARE NECESSARILY INDICATED ON THE DRAWINGS.
14. PROVIDE AND INSTALL VIBRATION ISOLATORS AS SPECIFIED ON ANY EQUIPMENT WITH MOVING PARTS.
15. ALL UNITS MUST BE INSTALLED LEVEL.
16. MECHANICAL CONTRACTOR TO PROVIDE TO THE PLUMBING CONTRACTOR THE RECOMMENDED A/C MANUFACTURER'S DATA FOR CONDENSATE TRAPS.
17. SMOKE DETECTORS SHOWN ON MECHANICAL PLANS ARE TO BE PROVIDED UNDER DIVISION 16, AND ARE SHOWN ON THESE SHEETS FOR LOCATION ONLY.
18. INSULATE ALL BACKPANS OF SUPPLY AIR DIFFUSERS WITH FOIL-FACED DUCT WRAP AS SPECIFIED. TAPE SECURELY TO AIR DEVICE.

MECHANICAL KEYED NOTES:

1. MOUNT A PROGRAMMABLE THERMOSTAT ON WALL AT APPROX. 48" A.F.F. COORDINATE EXACT LOCATION WITH OWNER PRIOR TO INSTALLATION.
2. PROVIDE A ROOFTOP UNIT AS INDICATED ON SCHEDULE. MOUNT UNIT ON A PREFABRICATED ROOFCURB PER MANUFACTURER'S INSTALLATIONS' INSTRUCTIONS. COORDINATE EXACT LOCATION OF UNIT WITH EXISTING STRUCTURE.
3. PROVIDE A RETURN AIR TRANSFER DUCT ABOVE THE CEILING AS SHOWN.
4. 3/4" CONDENSATE DRAIN DOWN CONCEALED IN WALL TO TAILPIECE OF SINK.
5. PROVIDE TEMPERATURE SENSOR IN RETURN AIR PLENUM
6. PROVIDE SMOKE DETECTOR IN RETURN AIR OF UNIT.
7. RELOCATE EXISTING SUPPLY DIFFUSERS

STATE OF TEXAS
ROSARIO R. CARRILLO
26358
REGISTERED
PROFESSIONAL ENGINEER
02-15-12
RC ENGINEERING, INC.
F-9785

RCE CONSULTING ENGINEERS.
5323 McCullough Ave
San Antonio, Texas 78212
Phone (210) 734-6004
Fax (210) 736-2058

HICKEY PEÑA & ARCHITECTS
ARCHITECTS PLUS, INC.

All matters contained hereon, including but not limited to drawings, written matter, ideas, and concepts, are and shall remain the property of A+INC. and H/P ARCHITECTS. They may not be reproduced, reused or modified in any way without prior written approval from and appropriate compensation paid to ARCHITECTS PLUS, INC. and HICKEY PEÑA ARCHITECTS.

JUSTICE OF THE PEACE PRECINCT 4
ADDITION AND RENOVATION
COUNTY OF WEBB
CITY OF LAREDO

Drawn by: M.A.C.
Checked: R.R.C.
Approved: R.R.C.
Date: 11/21/11
Revisions:
05/22/12

Job # 12-103

Drawing Name:
HVAC

M-1

SHT. 1. OF 2.

SECTION 15A: SPECIAL CONDITIONS FOR MECHANICAL & ELECTRICAL WORK

15A-01 GENERAL:

15A-01.01 THE GENERAL AND SPECIAL CONDITIONS ARE HEREBY MADE AN INTEGRAL PART OF DIVISIONS 15 AND 16 OF THE SPECIFICATIONS INSOFAR AS SAME ARE APPLICABLE TO THE WORK UNDER THESE DIVISIONS UNLESS OTHERWISE SPECIFIED HEREINAFTER.

15A-01.02 CONTRACTORS SHALL REFER TO REQUIREMENTS FOR BIDDERS OF MECHANICAL AND ELECTRICAL WORK UNDER OTHER SECTIONS OR ON ARCHITECTURAL DRAWINGS WHICH SHALL BE BINDING ON THE MECHANICAL AND ELECTRICAL CONTRACTORS UNLESS OTHERWISE NOTED.

15A-02 WORKMANSHIP AND MATERIALS:

15A-02.01 WORKMANSHIP SHALL BE OF THE BEST QUALITY AND NONE BUT COMPETENT MECHANICS SKILLED IN THEIR TRADES SHALL BE EMPLOYED. THE CONTRACTOR SHALL FURNISH THE SERVICES OF AN EXPERIENCED SUPERINTENDENT, WHO WILL BE CONSTANTLY IN CHARGE OF THE ERECTION OF THE WORK SPACE, UNTIL COMPLETED AND ACCEPTED. INCLUDED IN THE WORK SHALL BE PROPER UNLOADING, INSTALLING, CONNECTING, ADJUSTING, STARTING, TESTING OF WORK INVOLVED, INCLUDING EQUIPMENT AND MATERIALS FURNISH BY OTHERS AND THE OWNER.

15A-02.02 UNLESS OTHERWISE HEREINAFTER SPECIFIED, ALL MATERIALS AND EQUIPMENT UNDER THIS DIVISION OF THE SPECIFICATIONS SHALL BE NEW, OF BEST GRADE AND AS LISTED IN THE PRINTED CATALOGS OF THE MANUFACTURER. EACH ARTICLE OF ITS KIND SHALL BE THE STANDARD PRODUCT OF A SINGLE MANUFACTURER.

15A-03 CODES, PERMITS AND INSPECTION FEES:

15A-05.01 OBTAIN AND PAY FOR PERMITS AND INSPECTION FEES FOR WORK INCLUDED IN THIS PHASE OF THE CONTRACT. COMPLY IN EVERY RESPECT WITH REQUIREMENTS OF LOCAL INSPECTION DEPARTMENTS, NATIONAL FIRE PROTECTION ASSOCIATION, LOCAL AND STATE ORDINANCES AND CODES. IN NO CASE DOES THIS RELIEVE THE CONTRACTOR OF THE RESPONSIBILITY OF COMPLYING WITH THESE SPECIFICATIONS AND DRAWINGS WHERE SPECIFIC CONDITIONS ARE OF A HIGHER QUALITY AND QUANTITY THAN THE REQUIREMENTS OF THE ABOVE OFFICES. CONTRACTORS SHALL BE RESPONSIBLE FOR COMPLYING WITH THE MOST STRINGENT OF THE CODES, RULES, ORDINANCES OR THE SPECIFICATIONS AT NO EXTRA COST TO THE OWNER. REFERENCE TO STANDARDS ARE INTENDED TO BE THE LATEST REVISION OF THE STANDARD.

15A-05.02 THE APPLICABLE PORTIONS OF THE FOLLOWING LISTED CODES AND STANDARDS ARE HEREBY MADE A PART OF THIS SPECIFICATION, EXCEPT WHERE REQUIREMENTS ARE EXCEEDED IN THESE SPECIFICATIONS AND DRAWINGS.

(1) NATIONAL FIRE PROTECTION ASSOCIATION (NFPA):

NFPA NO. 70 NATIONAL ELECTRIC CODE
NFPA NO. 90A AIR CONDITIONING SYSTEMS
NFPA NO. 101 LIFE SAFETY CODE
NFPA NO. 200 SERIES, BUILDING CONSTRUCTION

(2) CURRENT CODES AND ORDINANCES OF THE LOCAL AUTHORITY

2009 INT'L MECHANICAL CODE
2009 INT'L PLUMBING CODE
2009 INT'L BUILDING CODE W/ CITY AMENDMENTS
2009 INT'L STANDARD FIRE CODE
2008 NEC

15A-04 EQUIPMENT AND CONNECTIONS:

15A-08.01 ALL APPARATUS, EQUIPMENT, DEVICES, AND APPLIANCES WHICH ARE INDICATED TO HAVE PIPE AND/OR ELECTRICAL CONNECTIONS SHALL BE SO EQUIPPED. EACH SUCH CONNECTION SHALL BE VALVED AND/OR TRAPPED.

15A-05 ELECTRICAL WIRING OF TEMPERATURE CONTRACTOR EQUIPMENT:

15A-12.01 THE MECHANICAL CONTRACTOR SHALL BE RESPONSIBLE FOR COMPLETE INSTALLATION OF ALL TEMPERATURE CONTROL WIRING AND FOR ALL INSTALLATION OF ALL INTERLOCK AND INTERCONNECTING WIRING WHETHER SHOWN ON DRAWINGS OR NOT. ELECTRICAL CONTRACTOR SHALL BE RESPONSIBLE FOR ALL POWER WIRING, STARTER CONNECTIONS, AND DISCONNECT SWITCHES. CONTROL WIRING SHALL BE MINIMUM OF NO. 14 AWG AND SHALL BE COPPER WITH TW INSULATION.

15A-12.02 MECHANICAL CONTRACTOR SHALL PREPARE OR HAVE PREPARED NECESSARY WIRING DIAGRAMS SHOWING POWER WIRING, INTERLOCK WIRING, AND TEMPERATURE CONTROL WIRING.

SECTION 15B: PLUMBING

15B-01 GENERAL REQUIREMENTS:

15B-01.01 SECTION 15A, SPECIAL CONDITIONS FOR MECHANICAL AND ELECTRICAL WORK ARE HEREBY MADE A PART OF THIS DIVISION OF THE SPECIFICATIONS INSOFAR AS SAME ARE APPLICABLE TO THE WORK UNDER THIS DIVISION UNLESS OTHERWISE HEREINAFTER SPECIFIED. PLUMBING CONTRACTOR SHALL COMPLY WITH ALL REQUIREMENTS THEREIN.

15B-02 SCOPE:

15B-02.01 WORK UNDER THIS DIVISION INCLUDES, BUT IS NOT LIMITED TO, THE FURNISHING OF ALL LABOR AND NEW MATERIALS AND EQUIPMENT AS NECESSARY TO INSTALL A COMPLETE SYSTEM OF PLUMBING FIXTURES, DRAINS, WATER PIPING, GAS PIPING AND OTHER SPECIFIED FACILITIES FOR THE STRUCTURE, INCLUDING ALL FINAL CONNECTIONS TO CONTRACTOR AND OWNER FURNISHED EQUIPMENT AND CONNECTIONS TO UTILITIES.

15B-03 SOIL, WATER, AND VENT PIPING:

15B-05.01 SOIL, WASTE AND VENT PIPING SHALL BE OF THE SIZES, QUALITY AND TYPE OF INSTALLATION REQUIRED BY THE LOCAL AUTHORITY. THE APPLICABLE SPECIFICATIONS, AND AS SHOWN ON THE DRAWINGS. PLUMBING LAYOUTS ON THE PLANS ARE DIAGRAMMATIC ONLY AND FOR THE PURPOSE OF SHOWING MAIN RUNS OF PIPING. VENTING, BRANCHES AND CONNECTIONS SHALL BE INSTALLED ACCORDING TO THE STANDARDS AS STATED ABOVE. IN GENERAL, PIPING SHALL BE SCHEDULE 40 PVC.

15B-04 DOMESTIC WATER SYSTEM:

15B-05.01 THE WATER SYSTEM CONSISTS OF PIPING AND CONNECTIONS TO ALL WATER-USING PLUMBING FIXTURES AND EQUIPMENT.

15B-05.02 UNLESS OTHERWISE NOTED, ALL WATER PIPING SHALL BE CONCEALED IN WALLS. PIPE INSTALLATION SHALL BE COORDINATED WITH LIGHTING AND ELECTRICAL EQUIPMENT. ALL EXPOSED PIPING SHALL BE ROUTED AND INSTALLED PARALLEL TO BUILDING WALLS UNLESS OTHERWISE SHOWN ON DRAWINGS, AND SHALL BE INSULATED.

15B-05 DOMESTIC WATER PIPE:

15B-05.01 COLD AND HOT WATER PIPE WITHIN THE BUILDING SHALL BE TYPE "L" HARD DRAWN COPPER TUBING WITH WROUGHT COPPER SOLDER FITTINGS USING 95/5 TIN-ANTIMONY SOLDER.

15B-05.02 DOMESTIC WATER LINES UNDER SLAB SHALL BE TYPE "K" SOFT TEMPER. NO SOLDER JOINTS SHALL BE MADE UNDER SLAB.

15B-05.03 EXTERIOR BELOW GRADE LINES SHALL BE SCHEDULE 40 PVC.

15B-06 TRENCHING AND BACKFILL

15B-06.01 THE PLUBMING CONTRACTOR SHALL BE RESPONSIBLE FOR PROVIDING ALL TRENCHING AND BACKFILL REQUIRED FOR THIS WORK. TRENCHING TO BE IN COMPLIANCE WITH ALL LOCAL AND STATE REQUIREMENTS FOR SAFTEY, COMPACTION AND FILL.

END OF SECTION

SECTION 15C: HEATING, VENTILATING, AND AIR CONDITIONING

15C-01 GENERAL REQUIREMENTS:

15C-01.01 SECTION 15A SPECIAL CONDITIONS FOR MECHANICAL AND ELECTRICAL WORK IS HEREBY MADE AN INTEGRAL PART OF THIS DIVISION OF THE SPECIFICATIONS INSOFAR AS SAME ARE APPLICABLE TO THE WORK UNDER THIS DIVISION UNLESS OTHERWISE HEREINAFTER SPECIFIED. HVAC CONTRACTORS SHALL COMPLY WITH ALL REQUIREMENTS THEREIN.

SECTION 16A: ELECTRICAL SPECIFICATIONS

16A-01 GENERAL REQUIREMENTS:

16A-01.01 SECTION 15A, SPECIAL CONDITIONS FOR MECHANICAL AND ELECTRICAL WORK ARE HEREBY MADE A PART OF THIS DIVISION OF THE SPECIFICATIONS INSOFAR AS SAME ARE APPLICABLE TO THE WORK UNDER THIS DIVISION UNLESS OTHERWISE HEREINAFTER SPECIFIED. ELECTRICAL CONTRACTOR SHALL COMPLY WITH ALL REQUIREMENTS THEREIN.

16A-02 SCOPE OF WORK:

16A-02.01 THE WORK COVERED BY THESE DRAWINGS AND SPECIFICATIONS SHALL INCLUDE THE FURNISHING OF ALL LABOR, MATERIALS, TRANSPORTATION, TOOLS, AND APPLIANCES REQUIRED IN THE PERFORMANCE OF ALL OPERATIONS REQUIRED BY THE CONTRACT. ALL ELECTRICAL WORK PERFORMED UNDER THIS SECTION SHALL BE IN ACCORDANCE WITH THE DRAWINGS AND SPECIFICATIONS AND SUBJECT TO THE TERMS AND CONDITIONS OF THE CONTRACT.

16A-02.02 THE APPROXIMATE LOCATION OF ELECTRICAL ITEMS ARE INDICATED ON THE ELECTRICAL DRAWINGS. THESE DRAWINGS ARE NOT INTENDED TO GIVE COMPLETE AND ACCURATE DETAILS IN REGARD TO LOCATION OF OUTLETS, APPARATUS, ETC. EXACT LOCATIONS ARE TO BE DETERMINED BY ACTUAL MEASUREMENTS AT THE BUILDING, AND WILL IN ALL CASES BE SUBJECT TO THE APPROVAL OF THE ENGINEER, AND HE RESERVES THE RIGHT TO MAKE ANY REASONABLE CHANGES IN THE LOCATIONS INDICATED WITHOUT ADDITIONAL COST.

16A-03 CODES AND STANDARDS:

16A-03.01 ALL WORK SHALL COMPLY WITH THE APPLICABLE RULES OF THE NATIONAL ELECTRICAL CODE, THE NATIONAL ELECTRICAL SAFETY CODE, AND NATIONAL FIRE CODES (PUBLISHED BY NATIONAL FIRE PROTECTION ASSOCIATION), THE LOCAL ELECTRICAL CODES AND ORDINANCES, AND THE TERMS AND CONDITIONS OF SERVICES OF THE ELECTRICAL UTILITY, AS WELL AS ANY OTHER AUTHORITIES THAT MAY HAVE LAWFUL JURISDICTION PERTAINING TO THE WORK SPECIFIED. NONE OF THE TERMS OR PROVISIONS OF THIS SPECIFICATION SHALL BE CONSTRUED AS WAIVING ANY OF THE RULES, REGULATIONS, OR REQUIREMENTS OF THESE AUTHORITIES.

16A-03.02 ALL MATERIALS, IN GENERAL, SHALL CONFORM TO THE NATIONAL ELECTRICAL CODE REQUIREMENTS AND SHALL BE LISTED, INSPECTED, AND APPROVED BY THE UNDERWRITERS LABORATORIES AND SHALL BEAR THE UL LABEL WHERE LABELING SERVICE IS AVAILABLE.

16A-04 WIRING METHODS AND MATERIALS:

16A-04.01 ALL ELECTRICAL CONDUCTORS INSTALLED OR CONNECTED SHALL BE RUN IN EMT, RIGID HOT-DIPPED GALVANIZED STEEL CONDUIT, UNLESS SPECIFICALLY NOTED OTHERWISE

16A-04.02 ALL CONDUITS SHALL BE RUN CONCEALED FROM VIEW WHEREVER POSSIBLE.

16A-04.03 ALL CONDUIT SHALL BE ADEQUATELY AND PROPERLY SUPPORTED FROM THE BUILDING STRUCTURE BY MEANS OF HANGER RODS OR CLAMPS TO WALLS.

16A-04.04 ALL CONDUCTORS SHALL BE SOFT-DRAWN ANNEALED COPPER WITH TYPE THW INSULATION. THE MINIMUM SIZE OF WIRE USED SHALL BE #12 AWG. ALL WIRE OF #8 GAUGE OR LARGER SHALL BE STRANDED. ALL WIRE AND CABLE SHALL BE FACTORY COLOR CODED.

16A-04.05 ALL OUTLET BOXES SHALL BE OF THE STANDARD GALVANIZED STEEL OF THE PROPER SIZE TO ACCOMMODATE THE WIRING OR DEVICE FOR WHICH FUNCTION THEY ARE PROVIDED. OUTLET BOXES SHALL GENERALLY BE 4" SQUARE OR OCTAGON WITH COVERS TO SUIT DEVICE TO BE MOUNTED THEREON, EXCEPT THAT IN MASONRY WALLS WITHOUT APPLIED FINISH, BOXES SHALL BE RECTANGULAR MASONRY BOXES.

16A-04.06 WIRING DEVICES SHALL BE SPECIFICATION GRADE AND OF THE TYPE AND KIND AS REQUIRED FOR DUTY. COVERPLATES SHALL BE INSTALLED ON ALL WIRING DEVICES AND SHALL BE AS INDICATED ON THE DRAWINGS. SWITCHES SHALL BE 20 AMPERE, 277 VOLT MECHANICALLY SILENT TYPE. CONVENIENCE OUTLETS SHALL BE GROUNDING TYPE AND RATES 20 AMPERE, 125 VOLT. COVER PLATES AND EXPOSED PARTS SHALL BE IVORY, EXCEPT IN SPECIAL AREAS WHERE PLATE AND PART COLORS SHALL BE COORDINATED WITH THE ARCHITECT.

16A-05 GROUNDING SYSTEM:

16A-05.01 GENERAL: THE ELECTRICAL SYSTEM SHALL BE GROUNDED IN ACCORDANCE WITH ARTICLE 250 OF THE NATIONAL ELECTRICAL CODE. ALL CONDUIT SYSTEMS, CABINETS, JUNCTION BOXES, MOTOR FRAMES, ELECTRICALLY OPERATED AND/OR CONTROLLED COOLING-HEATING UNITS, MISCELLANEOUS EQUIPMENT, ETC., SHALL BE GROUNDED BY BEING CONNECTED TO A COMMON-NEUTRAL GROUNDING SYSTEM.

16A-06 LIGHTING FIXTURES:

16A-06.01 THE ELECTRICAL CONTRACTOR SHALL FURNISH AND INSTALL LIGHTING FIXTURES COMPLETE WITH LAMPS FOR EVERY LIGHTING OUTLET SHOWN ON THE ACCOMPANYING DRAWINGS.

16A-06.02 ALL LIGHTING FIXTURES SHALL BE FURNISHED COMPLETE WITH MOUNTING ACCESSORIES TO SUIT THE SPECIFIC SERVICE INTENDED.

16A-07 IDENTIFICATION:

16A-07.01 ALL PANELBOARDS, STARTERS, DISCONNECT SWITCHES, CIRCUIT BREAKERS, TERMINAL BOARDS, JUNCTION BOXES AND OTHER SPECIAL EQUIPMENT, ITEMS FURNISHED AND/OR INSTALLED BY THE ELECTRICAL SUBCONTRACTOR SHALL BE IDENTIFIED WITH PERMANENTLY ATTACHED ENGRAVED PLASTIC NAMEPLATES.

16A-07.02 ALL JUNCTION BOXES AND OUTLET BOXES ABOVE CEILING AND IN UNFINISHED AREAS AND ALL OTHERS EXCEPT THOSE INSTALLED TO CONTAIN A SPECIFIC DEVICE SHALL BE PERMANENTLY AND LEGIBLY MARKED AS TO VOLTAGE, PHASE CHARACTERISTICS AND PANEL FROM WHICH SERVED.

16A-07.03 EACH AND EVERY BRANCH CIRCUIT IN ALL PANELBOARDS SHALL HAVE HANDWRITTEN IDENTIFICATIONS WITH COMPLETE DESCRIPTIONS OF LOAD SERVED.

16A-07.04 ALL EMPTY CONDUIT SYSTEMS SHALL BE IDENTIFIED AS TO USE AND JUNCTION AND OUTLET BOXES SHALL HAVE PULL WIRES IDENTIFIED, WITH POINT OF TERMINUS CLEARLY DESCRIBED.

16A-07.05 EACH AND EVERY WIRING SYSTEM SHALL BE IDENTIFIED AS TO VOLTAGE AND SERVICE THIS INCLUDES SIGNALS AND CONTROL CIRCUITS.

16A-08 GUARANTEE:

16A-08.01 THE ELECTRICAL CONTRACTOR SHALL GUARANTEE AGAINST DEFECTS IN ANY OR ALL MATERIALS, EQUIPMENT, OR WORKMANSHIP COVERED BY THE ELECTRICAL SPECIFICATIONS, EXCEPT SUCH MATERIALS, EQUIPMENT, OR WORKMANSHIP FURNISHED BY OTHERS, AND SHALL MAKE GOOD, REPAIR, OR REPLACE AT HIS OWN EXPENSE, ANY DEFECTIVE WORK, MATERIAL, OR PART WHICH MAY BECOME EVIDENT WITHIN A PERIOD OF ONE YEAR AFTER FINAL ACCEPTANCE OF THE WORK. NECESSARY SERVICE AND ADJUSTMENT DURING THE EARLY STAGES OF OPERATION AFTER OCCUPANCY SHALL BE PROVIDED BY THE CONTRACTOR WITHOUT ADDITIONAL COST TO OWNER.

16A-09 TELEPHONE SYSTEM

16A-09.01 THE TELEPHONE SYSTEM SHALL CONSIST OF A CONDUIT SYSTEM ON CONDUIT FROM THE TELEPHONE PEDESTAL TO A LOCATION SHOWN ON THE PLANS.

END OF SECTION

02-15-12
STATE OF TEXAS
ROSARIO R. CARRILLO
26358
LICENSED
PROFESSIONAL ENGINEER

RC CONSULTING ENGINEERS
5383 McCullough Ave
San Antonio, Texas 78212
Phone (210) 734-0004
Fax (210) 705-2055

RC ENGINEERING, INC.
F-9785

HICKEY PEÑA & ARCHITECTS
ARCHITECTS PLUS, INC.

All matters contained hereon, including but not limited to drawings, written matter, ideas, and concepts, are and shall remain the property of A+INC. and H/P ARCHITECTS. They may not be reproduced, reused or modified in any way without prior written approval from and appropriate compensation paid to ARCHITECTS PLUS, INC. and HICKEY PEÑA ARCHITECTS.

JUSTICE OF THE PEACE PRECINCT 4
ADDITION AND RENOVATION
COUNTY OF WEBB
CITY OF LAREDO

Drawn by: M.A.C.
Checked: R.R.C.
Approved: R.R.C.
Date: 11/21/11
Revisions:

Job # 12-103

Drawing Name:
SPECIFICATIONS

MEP-2

SHT. 2. OF 2.

MECHANICAL SYMBOLS LEGEND

10/8	RECTANGLE DUCT WITH TRANSITION. FIRST DIMENSION IS SIDE SHOWN.
	ELL WITH TURNING VANES.
	FLEXIBLE CONNECTION.
	DUCT BRANCH TAKE-OFF WITH EXTRACTORS
	DUCT SPIN TAP WITH AIR SCOOP AND ADJUSTABLE DAMPER
	FLEXIBLE DUCT
	SQUARE/RECTANGLE TO ROUND TRANSITION.
S.D.	ADJUSTABLE SPLITTER DAMPER
	SUPPLY AIR DEVICE, AS SCHEDULED. AIR PATTERN AS INDICATED ON DWGS.
	RETURN OR EXHAUST AIR DEVICE AS SCHEDULE.
F/S.D.	FIRE/SMOKE DAMPER.
V.D.	VOLUME DAMPER.
SD D	SMOKE DETECTOR DUCT MOUNTED
T	THERMOSTAT
EF-1	MECHANICAL EQUIP. DESIGNATION REFER TO SCHEDULE.
3	MECHANICAL KEYED NOTE
	ZONED/BYPASS DAMPER
A 320 CFM 12"ø NECK SIZE	AIR DEVICE DESIGNATION
	DUCT SECTION – SUPPLY
	DUCT SECTION – RETURN OR EXHAUST
—RL—	REFRIGERANT LIQUID
—RS—	REFRIGERANT SUCTION
—CD—	CONDENSATE DRAIN
ABV. CLG.	ABOVE CEILING
AHU	AIR HANDLING UNIT
CU	CONDENSING UNIT
EF	EXHAUST FAN
DF	DUCT FURNACE
O.A.	OUTSIDE AIR
RAG	RETURN AIR GRILLE
ZD	ZONE DAMPER
BD	BYPASS DAMPER

GENERAL MECHANICAL NOTES:

1. VERIFY ALL DIMENSIONS AT JOB SITE.
2. ESTABLISH WITH ARCHITECTS APPROVAL, FINAL LOCATION OF ALL EQUIPMENT.
3. DUCT SIZES SHOWN ARE INSIDE CLEAR DIMENSIONS.
4. CEILING DIFFUSER SIZES AS SHOWN ON PLANS INDICATE NECK SIZE DIFFUSERS SHALL BE ALL ALUMINUM TYPE EQUAL TO PRICE MFG. CO. MODELS.
5. SEAL AIRTIGHT WHERE DUCTS PASS THRU WALLS, FLOORS, ROOF, OR DUCT CHASERS.
6. ALL WORK SHALL CONFORM TO THE CITY CODES AND ALL OTHER AUTHORITIES HAVING JURISDICTION OBTAIN PERMITS, AND PAY ALL FEES.
7. VERIFY AT JOB SITE THE EXACT LOCATION OF STRUCTURAL MEMBERS SUCH AS BEAMS, COLUMNS ETC. TO LOCATE EQUIPMENT.
8. VERIFY AT JOB SITE ALL GENERAL WORK TO BE DONE AS SPECIFIED AS NOTED, OR AS REQUIRED FOR INSTALLATION, OF VARIOUS AIR CONDITIONING AND PLUMBING SYSTEMS PRIOR TO THE SUBMISSION OF BIDS.
9. MOUNT ALL THERMOSTATS 48" ABOVE FLOOR UNLESS OTHERWISE NOTED.
10. CONTRACTOR SHALL TAKE CARE IN THE INSTALLATION OF ALL DUCTWORK AND SHALL BE RESPONSIBLE FOR REPLACING ANY DAMAGED ITEMS.

FIRE ALARM SYSTEM:

GENERAL NOTES:

ALL DEVICES SHOWN ON DRAWINGS ARE SYMBOLIC ONLY. THE ENTIRE FIRE ALARM SYSTEM, SHALL BE IN FULL COMPLIANCE AND MEET ALL CODES AND REQUIREMENTS OF THE LOCAL ADMINISTRATIVE AUTHORITY. ANY MODIFICATIONS REQUIRED TO PROVIDE COMPLIANCE SHALL BE MADE AT NO ADDITIONAL COST TO THE OWNER OR ARCHITECT/ENGINEER.

EQUIPMENT AS FURNISHED BY PYROTECHNICS, EDWARDS, SIMPLEX OR APPROVED EQUAL SHALL BE ACCEPTABLE, FOR EASE OF MAINTENANCE AND PARTS REPLACEMENTS, USE EQUIPMENT OF A SINGLE MANUFACTURER, TO THE MAXIMUM EXTENT POSSIBLE.

NOTE: ALL FIRE ALARM DEVICES SHALL BE CONNECTED TO FACP.

ELECTRICAL SYMBOLS

	DISCONNECT SWITCH FUSED
D	DISCONNECT SWITCH NON-FUSED
J	JUNCTION BOX
M	ELECTRIC MOTOR
A-1	CONDUIT AND WIRE HOMERUN TO PANEL. SHORT HATCH INDICATES NEUTRAL CONDUCTOR, LONG HATCHES INDICATE PHASE CONDUCTORS, AND LONG HATCH WITH CIRCLE INDICATES ISOLATED OR INSULATED GROUND. ALPHA-NUMERIC DESCRIPTION INDICATES PANEL AND BREAKER.
ABV. CLG.	ABOVE CEILING
A.F.F.	ABOVE FINISHED FLOOR
A.C.	ABOVE COUNTER
U.G.	UNDER GROUND
U.F.	UNDER FLOOR
	SWITCH LEG
	ELECTRICAL COMPONENTS CIRCUITED TOGETHER ON THE SAME BREAKER.
$	TOGGLE SWITCH, SPST, MOUNTED AT 48" AFF
$3	THREE WAY TOGGLE SWITCH, MOUNTED AT 48" AFF
$D	DIMMER SWITCH MOUNTED AT 48" AFF
$M	MANUAL STARTER SWITCH
	QUADRAPLEX OUTLET
	208 VOLT SIMPLEX WALL RECEPTACLE, MOUNTED AT 18" AFF
	20A/120 VOLT DUPLEX RECEPTACLE, MOUNTED AT 18" AFF
W.P. G.F.I.	WATER-PROOF, GROUND FAULT INTERRUPTER DUPLEX RECEPTACLE
42"	DUPLEX RECEPTACLE, SUBSCRIPT DENOTES MOUNTING HEIGHT
	FLOOR BOX
	PANEL BOARD
	TELEPHONE RECEPTACLE, WITH 3/4" EMPTY CONDUIT WITH PULL STRING TO ABOVE CEILING. MOUNTED AT 18" AFF UNLESS OTHERWISE NOTED
	DATA RECEPTACLE
	TELEPHONE BOARD
T.V.	TELEVISION OUTLET WITH 3/4"EMPTY CONDUIT WITH PULL STRING TO ABOVE CEILING 84" A.F.F.
AV	AUDIO-VISUAL FIRE ALARM DEVICE
V	VISUAL FIRE ALARM DEVICE
F	FIRE ALARM PULL STATION MOUNTED AT 48"AFF
SD D	DUCT SMOKE DETECTOR
SD	SMOKE DETECTOR
FACP	FIRE ALARM CONTROL PANEL
ANN	ANNUNCIATOR PANEL
S	SPEAKER
WP	AUDIO WEATHER PROOF HORN FIRE ALARM
WP S	AUDIO WEATHER PROOF HORN P.A. SYSTEM
	INTERCOM/SPEAKER COMBINATION MOUNTED AT 48" A.F.F.
PC#	PHOTO CELL
LC#	LIGHTING CONTACTOR
KP	KEY PAD
	DOOR/WINDOW SECURITY CONDUIT. REFER TO DETAILS

GENERAL ELECTRICAL NOTES:

1. ALL WORK SHALL CONFORM TO NATIONAL ELECTRICAL CODES AND ALL OTHER AUTHORITIES HAVING JURISDICTION. OBTAIN PERMITS AND PAY ALL FEES. PERFORM MODIFICATIONS TO MEET CODE AND ORDINANCE REQUIREMENTS AT NO ADDITIONAL COST TO OWNER, ARCHITECT OR ENGINEER.
2. VERIFY AT JOB SITE THE EXACT LOCATIONS OF STRUCTURAL MEMBERS SUCH AS BEAMS, COLUMNS, ETC. TO LOCATE EQUIPMENT, CONDUIT, PANELS AND DEVICES. IF DEVIATIONS FROM THE DRAWING ARE NECESSARY TO MEET STRUCTURAL CONDITIONS, MAKE DEVIATIONS WITHOUT ADDITIONAL COST, TO OWNER, ARCHITECT, OR ENGINEER.
3. SUBMIT COMPLETE DESCRIPTIVE DATA TO OWNERS REPRESENTATIVE FOR APPROVAL BEFORE ORDERING EQUIPMENT.
4. ALL TERMS OF MATERIAL AND EQUIPMENT FOR WHICH STANDARDS HAVE BEEN ESTABLISHED BY UNDERWRITERS LABORATORIES, ELECTRICAL TESTING LABORATORIES OF NATIONAL ELECTRICAL MANUFACTURES ASSOCIATION SHALL BE APPROVED OR LISTED AND SHALL BEAR SUCH LABELS. ALL MATERIALS SHALL BE NEW.
5. TEST ALL EQUIPMENT INCLUDED IN THIS CONTRACT FOR PROPER OPERATION.
6. THE OWNER SHALL BE GUARANTEED BY THE ELECTRICAL CONTRACTOR THAT ANY DEFECTS ARISING IN THE WORK WITHIN ONE YEAR OF THE DATE OF ACCEPTANCE SHALL BE CORRECTED FREE OF CHARGE.
7. ALL SLEEVES, PENETRATIONS, ETC. SHALL BE SEALED SOLID NON-SHRINKING MATERIAL IMMEDIATELY UPON FILLING OF THE OPENING WITH PIPE OR CONDUIT.
8. GROUND ENTIRE ELECTRICAL SYSTEM IN STRICT ACCORDANCE WITH THE NATIONAL ELECTRICAL CODE.
9. CONDUIT OUTDOORS OR WHERE EXPOSED TO WET OR DAMP CONDITIONS SHALL BE RIGID, GALVANIZED STEEL W/THREADED FITTING. CONDUIT INDOORS SHALL BE E.M.T W/STEEL W/THREADED FITTINGS. SCHEDULE 40 PVC CONDUIT MAY BE USED UNDERGROUND ONLY.
10. ALL ELECTRICAL CONDUCTORS SHALL BE COPPER. WIRE #8 AND LARGER SHALL BE STRANDED AND HAVE MINIMUM TYPE THE INSULATION OR EQUAL.
11. COORDINATE ALL WORK AND ELECTRICAL EQUIPMENT LOCATIONS WITH CIVIL, ARCHITECTURAL, STRUCTURAL, AND MECHANICAL TRADES.
12. WALL RECEPTACLES SHALL BE DUPLEX CONVENIENCE OUTLETS, 20 AMPERES, 120V.
13. WALL SWITCHES SHALL BE HUBBELL 1223, 20 AMPERE. 120/277 VOLT A.C.
14. VERIFY AT JOB SITE GENERAL WORK TO BE DONE AS SPECIFIED, AS NOTED, OR AS REQUIRED FOR INSTALLATION OF ELECTRICAL SYSTEMS PRIOR TO SUBMISSION OF BIDS.
15. THE ELECTRICAL CONTRACTOR AND HIS EMPLOYEES SHALL PERFORM THEIR WORK IN A SAFE MANNER MAINTAIN ADEQUATE PROTECTION OF THEIR WORK, THE OWNER'S PROPERTY, AND ALL PERSONS ON THE SITE FROM INJURY, DAMAGE; OR LOSS.
16. CONTRACTOR SHALL NOTIFY ARCHITECT/ENGINEER OF ANY PROBLEM ARISING FROM INTERPRETATION ON THESE DOCUMENTS IMMEDIATELY AS IT IS DISCOVERED.
17. CONTRACTOR SHALL FIELD VERIFY EXISTING CONDITIONS AND EQUIPMENT TO BE REMOVED AND REPLACED BEFORE SUBMITTING HIS BID.

PLUMBING SYMBOLS

SYMBOL	DESCRIPTION
	TEE
	ELBOW
	DROP IN OR OUT OF WALL
	HOSE BIBB
	WATER HAMMER
	WYE OR "Y" BRANCH
	COMBINATION "Y" & 1/8" BEND
	"P" TRAP
	CROSS
	CUT-OFF VALVE
	FLOOR DRAIN
	Y.C.O. / F.C.O.
1	KEYED NOTE
1 P-1	PARTIAL PLAN DESIGNATION
AC	ABOVE CEILING
VTR	VENT THRU ROOF
	HOT WATER
	COLD WATER
AW	ACID WASTE
	VENT
	SANITARY SEWER
WC-1	FIXTURE DESIGNATION
V.T.R.	VENT THRU ROOF
	FLOW ARROW

GENERAL PLUMBING NOTES:

1. ALL NEW WORK SHALL CONFORM TO INTERNATIONAL PLUMBING CODE, ALL LOCAL AMENDMENTS AND THE AUTHORITY HAVING JURISDICTION. CONTRACTOR SHALL OBTAIN PERMITS AND PAY ALL FEES.
2. VERIFY AT JOB SITE THE EXACT LOCATION OF EXISTING STRUCTURAL MEMBERS SUCH AS BEAMS, COLUMNS, ETC. TO LOCATE EQUIPMENT AND NEW PIPING. IF DEVIATION TO THE DRAWINGS ARE NECESSARY TO MEET STRUCTURAL CONDITIONS. CONTRACTOR SHALL ADJUST PIPING, HANGERS, ETC.. AS REQUIRED WITHOUT ADDITIONAL COST TO OWNER, ARCHITECT, OR ENGINEER.
3. SUBMIT COMPLETE MANUFACTURERS DESCRIPTIVE DATA TO OWNERS REPRESENTATIVE FOR APPROVAL BEFORE ORDERING EQUIPMENT.
4. ALL ITEMS OF MATERIAL AND EQUIPMENT FOR WHICH STANDARDS HAVE BEEN ESTABLISHED SHALL BE APPROVED OR LISTED AND SHALL BEAR SUCH LABELS. ALL MATERIALS SHALL BE NEW.
5. TEST ALL EQUIPMENT/FIXTURES INCLUDED IN THIS CONTRACT FOR PROPER OPERATION.
6. THE OWNER SHALL BE GUARANTEED BY THE CONTRACTOR THAT ANY DEFECTS ARISING IN THE WORK WITHIN ONE YEAR OF THE DATE OF ACCEPTANCE SHALL BE FREE OF CHARGE.
7. ALL SLEEVES, PENETRATIONS, ETC. SHALL BE SEALED WITH NON-SHRINKING MATERIAL IMMEDIATELY UPON FILLING OF THE OPENING WITH PIPE OR CONDUIT. INSTALL UL LISTED FIRE RATED INTUMESCENT SEALANT AS REQUIRED THRU FIRE RATED FLOORS AND WALLS.
8. COORDINATE ALL WORK WITH CIVIL, ARCHITECTUAL, STRUCTURAL AND ELECTRICAL DISCIPLINES.
9. VERIFY AT JOB SITE ALL GENERAL WORK TO BE DONE AS SPECIFIED, AS NOTED OR AS REQUIRED FOR INSTALLATION PRIOR TO SUBMISSION OF BIDS.
10. THE MECHANICAL CONTRACTOR AND HIS EMPLOYEES SHALL PERFORM THEIR WORK IN A SAFE MANNER AND MAINTAIN ADEQUATE PROTECTION OF THEIR WORK, THE OWNER'S PROPERTY AND ALL PERSONS ON THE SITE FROM INJURY OR DAMAGE.
11. PORTIONS OF THIS WORK WILL BE PERFORMED IN OPERATIONAL AREAS OF THE PROPERTY. THIS WORK SHALL BE COORDINATED WITH THE OWNER AND SHALL BE PERFORMED ONLY WHEN THE OWNER INDICATES THE WORK AREA IS AVAILABLE. ALL WORK SHALL BE PERFORMED SO AS TO CREATE THE LEAST AMOUNT OF INTERFERENCE WITH THE OWNERS OPERATION. ALL POWER OUTAGES SHALL BE COORDINATED WITH THE OWNER.
12. VERIFY AT JOB SITE ALL GENERAL WORK TO BE DONE AS SPECIFIED AS NOTED, OR AS REQUIRED FOR INSTALLATION OF VARIOUS AIR CONDITIONING AND PLUMBING SYSTEMS PRIOR TO THE SUBMISSION OF BIDS.
13. ALL WATER LINES SHALL BE TYPE "L" COPPER ABOVE GRADE AND TYPE "K" BELOW GRADE AT THE BUILDING HOT WATER LINES WITHIN THE BUILDING SHALL BE INSULATED WITH 1" MOLDED PIPE INSULATION, COLD WATER LINES ABOVE THE CEILING SHALL BE INSULATED WITH 1" MOLDED PIPE INSULATION.
14. VENT LINES SHALL BE SCHEDULE 40 PVC PIPE WITH 4LB LEAD FLASHING ROOF PROVIDE VENT KITS FOR VENTS THRU SHEET METAL ROOF.
15. FLOOR DRAINS SHALL BE ZURN Z-415, HUB DRAINS ZURN Z-326, AND SHOKTROL ZURN Z-1700, PROVIDE SHOKTROLS ON THE TOP OF EACH H.W. AND C.W. RISER PRIOR TO REDUCTION IN SIZE. PROVIDE RECESSED FLOOR CLEANOUT COVERS TO ACCEPT TILE IN FINISHED FLOORS.
16. SANITARY WASTE SEWER AND VENT PIPE SHALL BE SCHEDULE 40 PVC PIPE. DRAINAGE PIPE AND FITTING MATERIALS FROM FIXTURES TO SANITARY SYSTEM SHALL BE CAST IRON, COPPER OR BRASS.
17. EXPOSED FIXTURE TRIM SHALL BE CHROME PLATED. PROVIDE INDIVIDUAL STOPS FOR EACH FIXTURE HOT AND COLD WATER CONNECTION TO FIXTURES.
18. PRIOR TO PLACING ANY WATER SYSTEM IN SERVICE, THE CONTRACTOR SHALL STERILIZE THE SYSTEM.
19. ALL FLOOR DRAINS SHALL BE PRIMED, UNLESS OTHERWISE NOTED.
20. PLUMBING CONTRACTOR SHALL FIELD VERIFY EXACT LOCATION OF EXISTING WATER AND SANITARY SEWER MAINS, AND SHALL CONNECT NEW WATER AND SANITARY SEWER ACCORDINGLY.
21. INSTALL WATER CLOSET FLUSH VALVE HANDLES ON WIDE SIDE OF STALL OR OPEN SIDE OF RESTROOM.
21. INSTALL TRUBRO HANDI-LAV GUARD KITS ON HANDI-CAP SINK P-TRAPS AND BOTH WATER SUPPLIES.

STATE OF TEXAS
ROSARIO R. CARRILLO
26358
REGISTERED
PROFESSIONAL ENGINEER
02-15-12

RCE CONSULTING ENGINEERS.
5383 McCullough Ave
San Antonio, Texas 78212
Phone (210) 734-0004
Fax (210) 736-2060

RC ENGINEERING, INC.
F-9785

HICKEY PEÑA & ARCHITECTS
ARCHITECTS PLUS, INC.

All matters contained hereon, including but not limited to drawings, written matter, ideas, and concepts, are and shall remain the property of A+INC. and H/P ARCHITECTS. They may not be reproduced, reused or modified in any way without prior written approval from and appropriate compensation paid to ARCHITECTS PLUS, INC. and HICKEY PEÑA ARCHITECTS.

JUSTICE OF THE PEACE PRECINCT 4
ADDITION AND RENOVATION
COUNTY OF WEBB
CITY OF LAREDO

Drawn by: M.A.C.
Checked: R.R.C.
Approved: R.R.C.
Date: 11/21/11
Revisions:

Job # 12-103

Drawing Name:
GEN. NOTES

MEP-1

SHT. 1. OF 2.

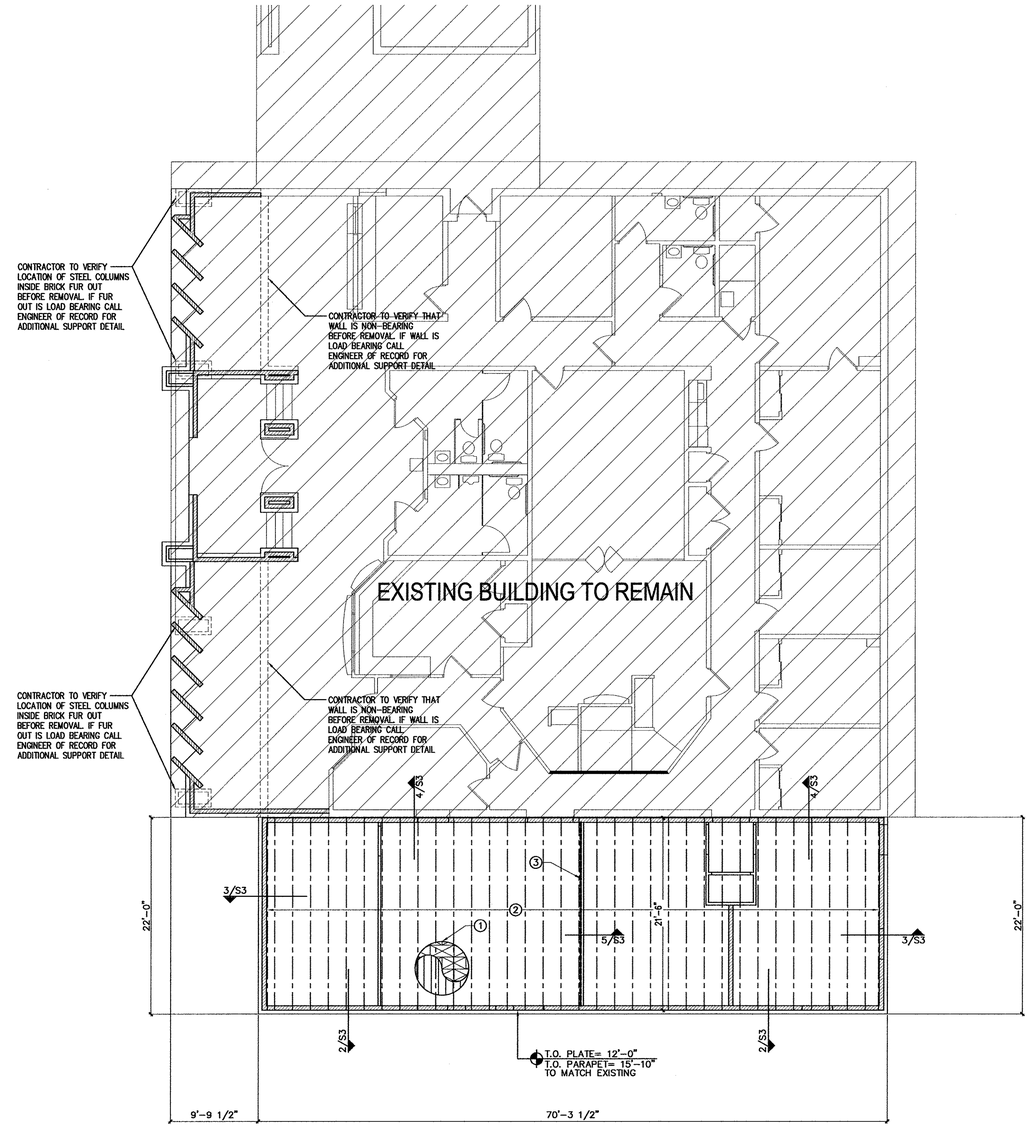

1 ROOF FRAMING PLAN
SCALE: 1/8"=1'-0"

FRAMING GENERAL NOTES

1. SEE SHEET S-1 FOR GENERAL NOTES.
2. REFER TO MECHANICAL AC DRAWINGS FOR LOCATION AND SIZE OF REFRIGERANT PIPING AND DUCT WORK, MECHANICAL UNITS, WEIGHTS, & SUPPORTS.
3. DIMENSIONS SHOWN ARE FOR GENERAL INFORMATION, COORDINATE WITH ARCHITECTURAL PLANS.
4. PRE-FABRICATED TRUSS MANUFACTURER TO REFER TO MECHANICAL DRAWINGS FOR MECHANICAL EQUIPMENT LOCATION AND WEIGHTS.
5. WALL LEGEND:
   - INDICATES 2x4 WOOD STUDS @ 16" O.C. SOUTHERN YELLOW PINE #2 OR BETTER WITH CONT. BLOCKING AT 48" O.C.
   - INDICATES 2x6 WOOD STUDS @ 16" O.C. SOUTHERN YELLOW PINE #2 OR BETTER WITH CONT. BLOCKING AT 48" O.C.
6. ABBREVIATIONS:
   - CLC=CENTER LINE COLUMN
   - FOC=FACE OF COLUMN
   - FOW=FACE OF WALL
   - FFE=FINISH FLOOR ELEVATION
7. ALL ELEVATIONS REFERENCED HEREIN, ARE FROM THE BUILDING FINISH FLOOR ELEVATION OF 0'-0". REFER TO CIVIL PLANS FOR FINAL BUILDING ELEVATION.

KEYED FRAMING NOTES

1. ROOFING PER ARCHITECT OVER 5/8" CDX PLYWOOD WITH PLY CLIPS STRUCTURAL I (SPAN RATING 24/16) WITH 10d NAILS @ 12" O.C. F.N., 6" O.C. FOR B.N. & E.N. PLACE PLYWOOD ACROSS JOISTS.
2. PRE-FABRICATED ROOF WOOD TRUSSES 3'-8" DEEP AT 24" O.C. MAX. PROVIDE BLOCKING AND BRIDGING AS PER MANUFACTURERS RECOMMENDATIONS REFER TO MECHANICAL PLANS FOR LOCATION OF A/C DUCTS.
3. INTERIOR SHEARWALL

WOOD LINTEL SCHEDULE		
SPAN	SIZE	WOOD SPECIES
< 3'-6"	(2) 2x8	SOUTHERN PINE No.2
3'-6" < 6'-6"	(3) 2x12	SOUTHERN PINE No.1
> 6'-6"	SEE PLAN	

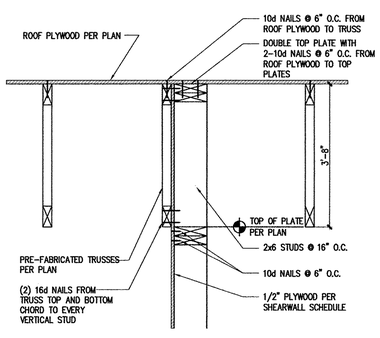

5 INTERIOR SHEARWALL CONNECTION TO ROOF
SCALE: 1"=1'-0"

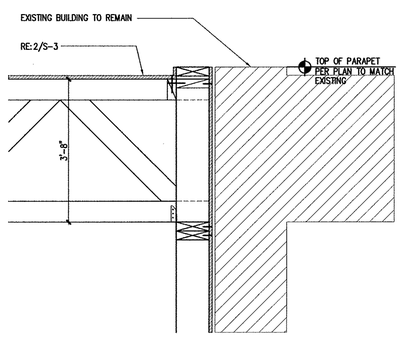

4 ROOF TRUSSES BEARING ON WALL AT E.J.
SCALE: 1"=1'-0"

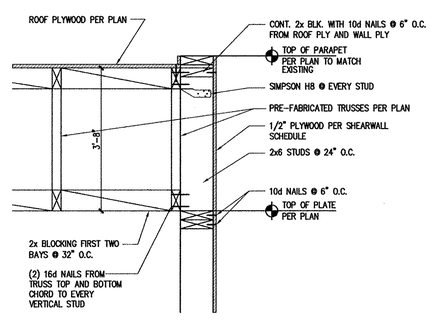

3 ROOF TRUSSES PARALLEL TO WALL
SCALE: 1"=1'-0"

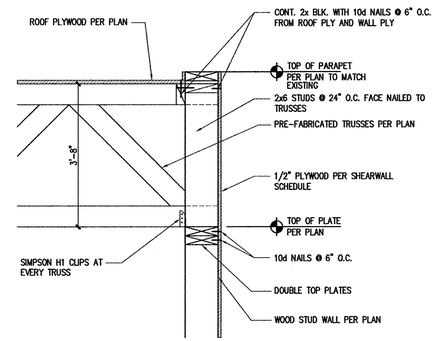

2 ROOF TRUSSES BEARING ON WALL
SCALE: 1"=1'-0"

STATE OF TEXAS
VICTOR M. DeANDA JR.
92641
LICENSED PROFESSIONAL ENGINEER
06/13/12
THE SEAL APPEARING ON THIS DOCUMENT WAS AUTHORIZED BY VICTOR M. DE ANDA JR., P.E. 92641 EXPIRES ON 09/30/2012.

SYNERGY STRUCTURAL ENGINEERING, INC.
901 VICTORIA ST. SUITE "C"
LAREDO, TX. 78040
(956) 753-5860 (fax) 753-6210
synergy@synergy-se.com
TBPE Firm Registration No.: F-7661

HICKEY PEÑA & ARCHITECTS
ARCHITECTS PLUS, INC.

These drawings and specifications are and shall remain the property of the Engineer. They may not be reused, reproduced or altered in any way without prior written approval from and with appropriate compensation to the Engineer.

JUSTICE OF THE PEACE PRECINCT 4
ADDITION AND RENOVATION
COUNTY OF WEBB
CITY OF LAREDO

Drawn by: VDA
Checked: VDA
Approved: VDA
Date: 02/29/2012
Revisions: 06/13/2012

Job # SSE-11-060

Drawing Name: ROOF FRAMING PLAN

S-3R

SHT. 3 OF 3

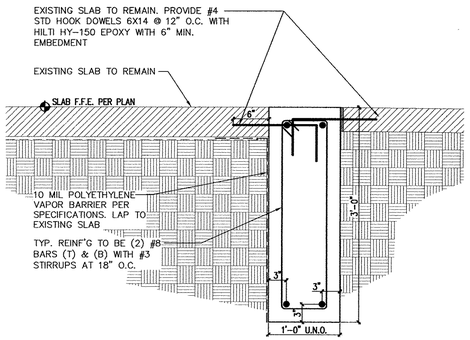

6 PERIMETER GRADE BEAM AT EXISTING SLAB
SCALE: 1"=1'-0"

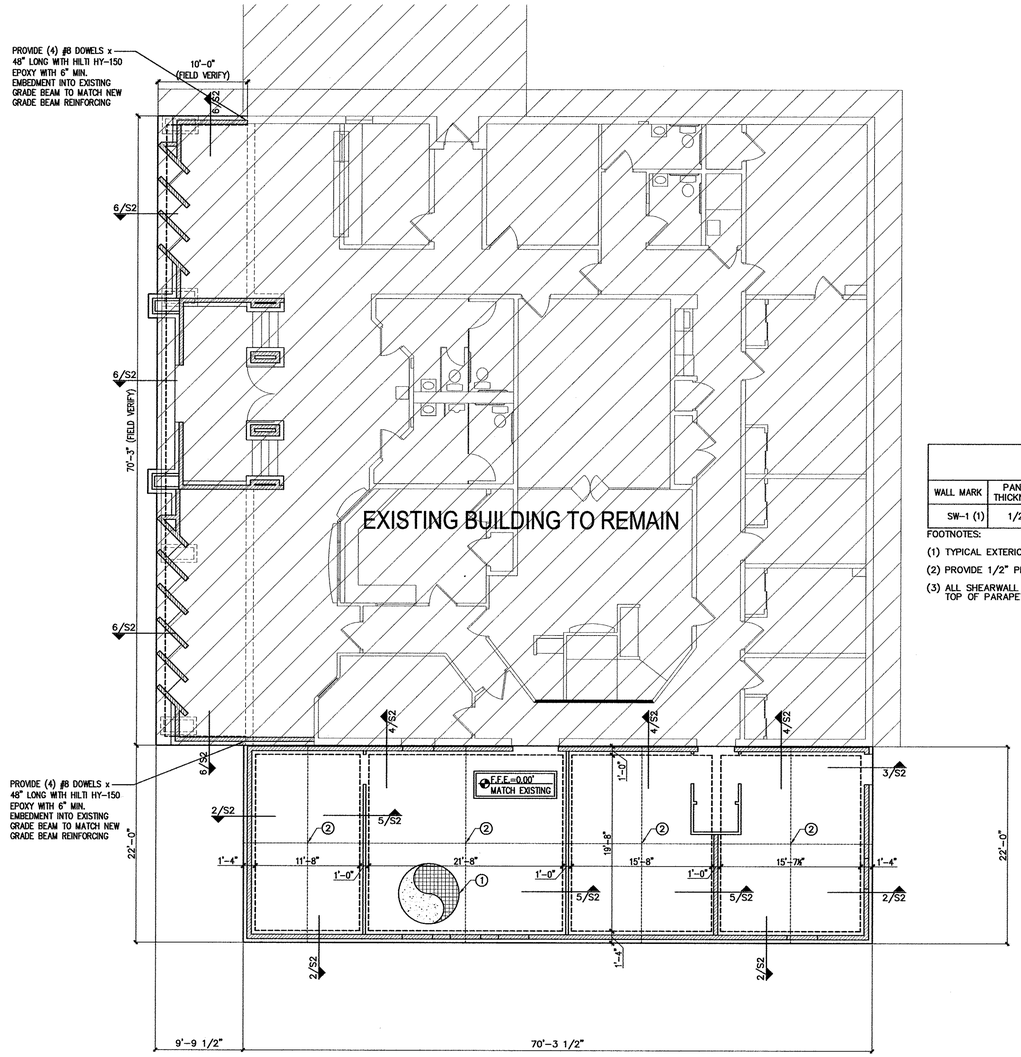

1 FOUNDATION PLAN
SCALE: 1/8"=1'-0"

FOUNDATION NOTES

1. SEE SHEET S-1 FOR GENERAL NOTES AND TYPICAL CONCRETE DETAILS.
2. CONTRACTOR IS RESPONSIBLE FOR LOCATION OF ALL FLOOR DRAINS (F.D.) WHETHER OR NOT THEY ARE NOTED ON THE STRUCTURAL NOTES OR PLANS.
3. DIMENSIONS SHOWN ARE FOR GENERAL INFORMATION, COORDINATE WITH ARCHITECTURAL PLANS.
4. CONTRACTOR/SUBCONTRACTOR IS RESPONSIBLE FOR VERIFYING ALL DIMENSIONS WITH ARCHITECTURAL PLANS BEFORE COMMENCING ANY WORK. THE CONTRACTOR/SUBCONTRACTOR SHALL REPORT ANY DISCREPANCIES TO THE ARCHITECT/ENGINEER BEFORE THE WORK HAS BEGUN.
5. WALL LEGEND:
   - INDICATES 2x4 WOOD STUDS @ 16" O.C. SOUTHERN YELLOW PINE #2 OR BETTER WITH CONT. BLOCKING AT 48" O.C.
   - INDICATES 2x6 WOOD STUDS @ 16" O.C. SOUTHERN YELLOW PINE #2 OR BETTER WITH CONT. BLOCKING AT 48" O.C.
6. ABBREVIATIONS:
   - CLC=CENTER LINE COLUMN
   - FOC=FACE OF COLUMN
   - FOW=FACE OF WALL
   - FFE=FINISH FLOOR ELEVATION
7. ALL ELEVATIONS REFERENCED HEREIN, ARE FROM THE BUILDING FINISH FLOOR ELEVATION OF 0'-0". REFER TO CIVIL PLANS FOR FINAL BUILDING ELEVATION.

KEYED FOUNDATION NOTES

1. 5" THICK SLAB ON GRADE WITH #4 BARS @ 15" O.C. EACH WAY AT MID-DEPTH OF SLAB OVER 10 MIL VISQUEEN MOISTURE BARRIER OVER APPROVED COMPACTED FILL.
2. SLAB CONTROL JOINTS, SEE DETAIL 6/S-1
3. INTERIOR SHEARWALL.

SHEAR WALL SCHEDULE (2)(3)

WALL MARK	PANEL THICKNESS	STUD SPACING	HORIZONTAL BLOCKING	NAILS	EDGE NAILING	INTERMEDIATE NAILING	ANCHOR BOLTS TO FOUNDATION	ANCHOR BOLTS SPACING
SW-1 (1)	1/2"	16" O.C.	4'-0" O.C.	8d	6" O.C.	6" O.C.	5/8" DIA. x 12" GALVANIZED	32" O.C.

FOOTNOTES:

(1) TYPICAL EXTERIOR WALL.

(2) PROVIDE 1/2" PLYWOOD OR OSB AT ALL EXTERIOR WALLS MIN. U.N.O.

(3) ALL SHEARWALL PANELS TO UNDERSIDE OF ROOF DECK OR TOP OF PARAPET WALL.

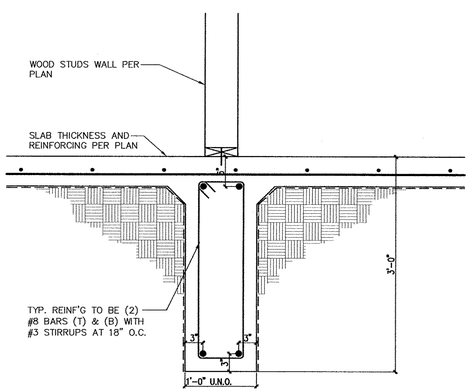

5 INTERIOR GRADE BEAM
SCALE: 1"=1'-0"

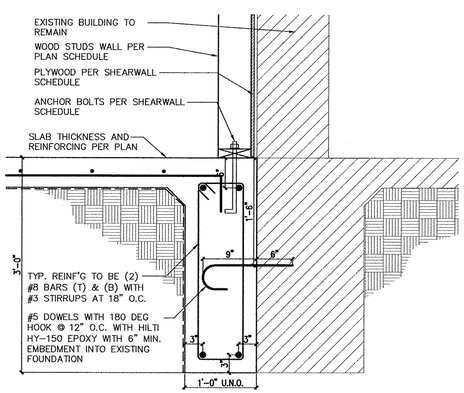

4 PERIMETER GRADE BEAM AT EXP. JT.
SCALE: 1"=1'-0"

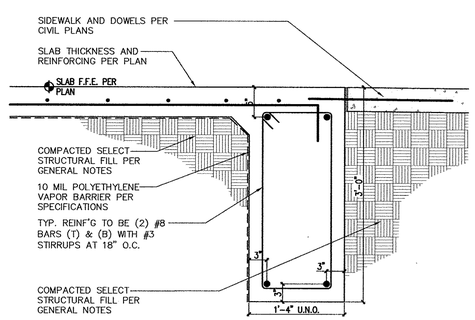

3 PERIMETER GRADE BEAM AT ENTRY
SCALE: 1"=1'-0"

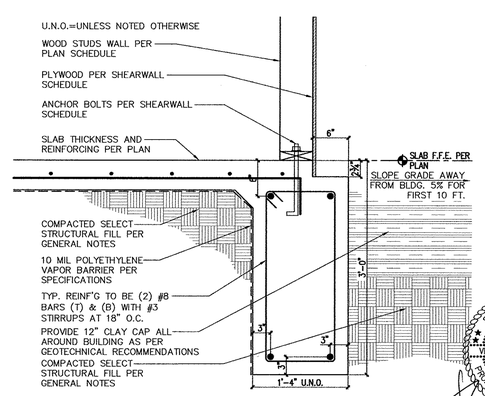

2 PERIMETER GRADE BEAM
SCALE: 1"=1'-0"

STATE OF TEXAS
VICTOR M. DeANDA JR.
92641
LICENSED
PROFESSIONAL ENGINEER
06/13/12

THE SEAL APPEARING ON THIS DOCUMENT WAS AUTHORIZED BY VICTOR M. DE ANDA JR., P.E. 92641 EXPIRES ON 09/30/2012.

SYNERGY STRUCTURAL ENGINEERING, INC.
901 VICTORIA ST. SUITE "C"
LAREDO, TX. 78040
(956) 753-5860 (fax) 753-6210
synergy@synergy-se.com
TBPE Firm Registration No.: F-7661

HICKEY PEÑA & ARCHITECTS
ARCHITECTS PLUS, INC.

These drawings and specifications are and shall remain the property of the Engineer. They may not be reused, reproduced or altered in any way without prior written approval from and with appropriate compensation to the Engineer.

JUSTICE OF THE PEACE PRECINCT 4
ADDITION AND RENOVATION
COUNTY OF WEBB
CITY OF LAREDO

Drawn by: VDA
Checked: VDA
Approved: VDA
Date: 02/29/2012
Revisions: 06/13/2012

Job # SSE-11-060

Drawing Name: FOUNDATION PLAN

S-2R

SHT. 2 OF 3

H.WOOD NOTES

1. SAWN WOOD MEMBERS SHALL BE SOUTHERN PINE, S4S, AND SHALL BE GRADE MARKED BY A RECOGNIZED GRADING AGENCY, REFER TO PROJECT BOOK SPECIFICATIONS DIVISION 6 FOR MORE INFORMATION.
2. WOOD GRADES, U.N.O., SHALL BE AS FOLLOWS:

MEMBERS	GRADE
WALLS 2X4 (8'-0")	CONSTRUCTION
WALLS 2X4 (8'-1" TO 14'-0")	#1
WALLS 2X6	#2
STRUCTURAL JOISTS & RAFTERS	#2
BEAMS AND STRINGERS	#1
POSTS AND TIMBERS	#1
TOP PLATE	#1

3. ALL SILLS OR PLATES BEARING ON CONCRETE SHALL BE PRESSURE TREATED SOUTHERN PINE (P.T.D.F.).
4. ALL SILLS OR PLATES BEARING ON CONCRETE SHALL HAVE ANCHOR BOLTS. U.O.N.
   A. PLACED 9 INCHES FROM EACH END (OR FROM A NOTCH)
   B. SPACED AS SHOWN ON THE DRAWINGS (BETWEEN BOLTS NOTED IN A.).
5. PLYWOOD SHALL CONFORM TO THE REQUIREMENTS OF THE U.S. PRODUCT STANDARD PS1-83, APA PERFORMANCE STANDARDS, AND UBC STANDARD 25-9, AND SHALL BE OF THE FOLLOWING GRADES AND PANEL IDENTIFICATION INDEXES (U.N.O. ON DRAWING):

ROOF SHEATHING	STRUCTURAL 1	24/16
SHEAR PANELS	STRUCTURAL 1	24/0

6. GLUED LAMINATED TIMBERS SHALL BE FABRICATED IN ACCORDANCE WITH ANSI/AITC A190.1-1983 "STRUCTURAL GLUED LAMINATED TIMBER". USING SOUTHERN PINE PANEL GRADE IDENTIFICATION INDEX I INDUSTRIAL APPEARANCE (U.N.O. PER PLAN AS ARCHITECTURAL GRADE) GRADE WOOD AND EXTERIOR GLUE WITH INTENDED DRY USE CONDITION PER SECT. 2511(c), UBC, COMBINATIONS AND USE SHALL BE AS FOLLOWS:

COMBINATION No.	USE
16F-V5	TYPICAL

7. GLUED LAMINATED TIMBERS SHALL BE MARKED WITH A QUALITY MARK AND IN ADDITION, A CERTIFICATE OF CONFORMANCE SHALL BE PROVIDED TO INDICATE CONFORMANCE WITH ANSI/AITC A190.1-1983, "STRUCTURAL GLUED LAMINATED TIMBER".
8. LAMINATED VENNER LUMBER: USE LOUSIANA PACIFIC GANG-LAM S LAMINATED VENEER LUMBER (LVL) 2950 Fb-2.0E SOUTHERN PINE
9. FRAMING ANCHORS, POST CAPS, COLUMN BASES, AND OTHER CONNECTORS SPECIFIED ON DRAWINGS SHALL BE AS MANUFACTURED BY "SIMPSON COMPANY" OR AN ENGINEER-APPROVED EQUAL.
10. BARS, PLATES, UNTHREADED BOLTS, WASHERS AND DRIFT BOLTS SHALL CONFORM TO THE REQUIREMENTS OF ASTM A 36.
11. BOLTS SHALL BE CONFORM TO ASTM A 307.
12. NUTS SHALL CONFORM TO THE REQUIREMENTS OF ASTM A 563, GRADE A.
13. ALL BOLT HEADS, NUTS AND LAG SCREWS BEARING ON WOOD SHALL HAVE CUT WASHERS UNLESS NOTED.
14. BOLT HOLES IN WOOD SHALL BE DRILLED 1/32" LARGER THAN THE NOMINAL BOLT DIAMETER.
15. NAILING OF SAWN WOOD MEMBERS, U.N.O. ON THE DRAWINGS, SHALL CONFORM TO THE SBCCI AND THE FOLLOWING

CONNECTION	NAILING*	
JOIST TO SILL OR GIRDER	TOENAIL	2-10d
BLKG. BETWEEN JSTS. TO TOP PL	TOENAIL	3-8d
BLKG. BETWEEN STUDS, EA END	TOENAIL OR FACE NAIL	2-10d, 2-16d
BRIDGING TO JOIST	TOENAIL EA. END	2-10d
2" T & G TO JST. OR GIRDER	BLIND & FACE NAIL	2-16d
SOLE PLATE TO JOIST OR BLKG.	FACE NAIL	16d @ 16"
TOP PLATE TO STUD	END NAIL	2-16d
STUD TO SOLE PLATE	TOENAIL	4-8d
	OR END NAIL	2-16d
DOUBLE STUDS	FACE NAIL	16d @ 24"
DOUBLE TOP PLATES	FACE NAIL	16d @ 16"
TOP PLATE INTERSECTIONS	FACE NAIL	2-16d
CONT.HEADER,TWOPIECES	FACENAILSEA.EDGE	16d @ 16"
CEILING JOIST TO PLATE	TOENAIL	3-8d
CONTINUOUS HEADER TO STUD	TOENAIL	4-8d
CLG. JSTS., LAPS OVER PARTITONS	FACE NAIL	3-16d
CLG. JSTS. TO PARALLEL RAFTERS	FACE NAIL	3-16d
RAFTER TO PLATE	TOENAIL	3-8d
1" BRACE TO EACH STUD & PLATE	FACE NAIL	2-8d
BUILT-UP CORNER STUDS	FACE NAIL	16d @ 24"
BUILT-UP GIRDERS & BEAMS	STGRD. ALONG EA. EDGE	20d @ 32"
	AT ENDS & EA. SPLICE	2-20d

*WHENEVER POSSIBLE NAILS DRIVEN PERPENDICULAR TO THE GRAIN SHALL BE USED INSTEAD OF TOENAILS.

17. USE OF MACHINE NAILING IS SUBJECT TO A SATISFACTORY JOBSITE DEMONSTRATION FOR EACH PROJECT AND THE APPROVAL BY THE PROJECT ARCHITECT OR STRUCTURAL ENGINEER AND THE BUILDING OFFICIAL. THE APPROVAL IS SUBJECT TO CONTINUED SATISFACTORY PERFORMANCE. MACHINE NAILING WILL NOT BE APPROVED IN 5/16" PLYWOOD. IF NAILHEADS PENETRATE THE OUTER PLY MORE THAN WOULD BE FOR A HAND HAMMER OR IF MINIMUM ALLOWABLE EDGE DISTANCES ARE NOT MAINTAINED THE PERFORMANCE WILL BE DEEMED UNSATISFACTORY.
18. NAILS UNLESS NOTED OTHERWISE SHALL BE COMMON NAILS. (NOT BOX NAILS)
19. SPECIAL CONNECTORS FOR CONNECTING WOOD OR GLUED LAMINATED TIMBER SHALL BE FABRICATED FROM STEEL CONFORMING TO ASTM A36. WELDS SHALL CONFORM TO THE REQUIREMENTS OF AWS D1.1-85.
20. DIAPHRAGM NAILING SPACING SHALL CONFORM TO THE PLANS WITH NOMENCLATURE DEFINED AS FOLLOWS:
    BN= NAILING AT DIAPHRAGM BOUNDARIES, CONTINUOUS PANEL EDGES, AND AT EDGES OF OPENING.
    EN =EDGE NAILING
    FN =FIELD NAILING
21. WHERE THE DIAPHRAGM BLOCKING IS SPECIFIED, USE 2x4 FLAT BLOCKING (WITH "Z" CLIPS). U.O.N.
22. SIMPLE SPAN WOOD MEMBERS, NOT SHOP CHAMBERED, SHALL BE ERECTED WITH THE NATURAL CAMPER UP. FOR CANTILEVERED WOOD MEMBERS, CONSULT WITH ENGINEER.
23. LEAD HOLES FOR LAG SCREWS IN WOOD SHALL BE BORED AS FOLLOWS:
    FOR SHANK: SAME DIAMETER AND LENGTH AS UNTHREADED SHANK.
    FOR THREADED PORTION: 60% TO 75% OF SHANK DIAMETER & LENGTH EQUAL TO THE THREADED PORTION.
24. ALL NAILS LARGER THAN 16d AND ALL NAILING TENDING TO CAUSE SPLITTING OF WOOD MEMBERS, SHALL BE INSTALLED IN PREDRILLED HOLES.
25. SPECIAL PROVISIONS FOR WOOD STUD SHEAR WALLS WITH PLYWOOD ON BOTH SIDES:
    A. SILL PLATE SHALL BE 3 X 6 P.T. D.F.
    B. ALL STUDS AND BLOCKING AT PANEL EDGES SHALL BE 4 X 6.
    C. ALL OTHER INTERMEDIATE STUDS SHALL BE 3 X 6 @ 16"
    D. END POSTS (OR COLUMNS) SHALL BE AS SPECIFIED ON THE DRAWINGS.
    E. BOTH VERTICAL AND HORIZONTAL INTERIOR PANEL JOINTS ON OPPOSITE SIDES OF THE WALL SHALL BE STAGGERED.
    F. THE PLYWOOD ON ONE SIDE MUST BE NAILED BEFORE THE FRAME INSPECTION. THE PLYWOOD ON THE OTHER SIDE MUST BE INSTALLED AND INSPECTED PRIOR TO INSTALLATION OF WALL SURFACE COVERING.
    G. NO PENETRATIONS OR NOTCHES ARE PERMITTED OTHER THAN THOSE SHOWN ON THE STRUCTURAL DRAWINGS.
26. PROVIDE DOUBLE STUD TO SUPPORT ALL BEAMS UNLESS POSTS ARE SPECIFIED.
27. DOUBLE BLOCK UNDER ALL POSTS.
28. DOUBLE JOIST UNDER ALL PARALLEL PARTITIONS UNLESS OTHERWISE SPECIFIED.
29. TOP PLATES OF ALL WOOD STUD WALLS SHALL BE 2-2X (SAME WIDTH AS STUDS), LAP 48" (MIN.), WITH AT LEAST 16-16d NAILS AT EACH SIDE OF LAP AND NOT MORE THAN 12" BETWEEN.
    2x TOP PLATES ON CURVED STUD WALLS TO BE 8'-0" LONG PIECES (MIN.), CUT FROM 2x DEPTH AS REQUIRED BASED ON CURVATURE.
30. CUTTING, NOTCHING, OR DRILLING OF BEAMS OR JOISTS SHALL BE PERMITTED ONLY AS DETAILED OR APPROVED BY THE ENGINEER AND/OR PER SBCCI
31. MOISTURE CONTENT OF WOOD AT TIME OF PLACEMENT SHALL NOT EXCEED 19%.

E. PREFABRICATED WOOD FLOOR AND ROOF TRUSSES

1. STRUCTURAL DESIGN, DIMENSIONS, TRUSS CONFIGURATION AND QUANTITY IS THE RESPONSIBILITY OF THE TRUSS MANUFACTURER. VERIFY PLAN DIMENSIONS AND ROOF PITCHES WITH ARCHITECTURAL PLANS.
2. ROOF TRUSS PROFILES ARE SHOWN FOR FRAMING INTENT TO TRANSFER TRUSS LOADS TO BEARING POINTS ONLY.
3. TRUSSES TO BE DESIGNED FOR THE FOLLOWING LOADS:
   ROOF:

LIVE LOAD	20 PSF
DEAD LOAD- TOP CHORD	10 PSF
- BOTTOM CHORD	10 PSF
RAIN LOAD	42 PSF

4. DESIGN OF PLATE CONNECTED TRUSSES SHALL CONFORM TO THE LATEST EDITIONS OF NATIONAL DESIGN STANDARDS (NDS), TRUSS PLATE INSTITUTE CRITERIA (TPI), AND INTERNATIONAL BUILDING CODE 2000. STEEL GUSSET PLATES SHALL BE A MINIMUM 20 GAGE, ASTM-A-446 GRADE A, APPROVED BY ICBO.
5. MAXIMUM MOISTURE CONTENT AT TIME OF FRABRICATION SHALL BE 19% MAX.
6. TRUSS DESIGN AND LAYOUT SHALL BE SEALED BY A PROFESSIONAL ENGINEER LICENSE IN THE STATE OF TEXAS AND SUBMITTED TO ARCHITECT/ENGINEER FOR REVIEW PRIOR TO FABRICATION.
7. TRUSS FABRICATION SHALL COMPLY WITH TPI QUALITY CONTROL STANDARDS (QCM-LATEST EDITION). TRUSS PLANT SHALL BE INSPECTED BY THIRD PARTY CERTIFIED AGENCY.
8. THE TRUSSES SHALL BE ERECTED, BRACED AND BLOCKED IN ACCORDANCE WITH COMMENTARY AND RECOMMENDATIONS FOR HANDLING, INSTALLING AND BRACING OF METAL PLATE CONNECTED WOOD TRUSSES (HIB-91) BY TPI.
9. ALL TRUSSES, UNLESS NOTED OTHERWISE, SHALL BE CONNECTED TO BEARING PLATE WITH SIMPSON H1 OR H2.5A TIES OR REVIEWED EQUIVALENT.
10. UNLESS NOTED OTHERWISE, ATTACH TOP OF NON-BEARING WALLS TO TRUSS BOTTOM CHORD WITH SIMPSON STC CLIPS OR REVIEWED EQUIVALENT.
11. IF TRUSS-BEARING CONDITIONS VARY FROM THOSE INDICATED ON PLANS, NOTIFY ARCHITEC/ENGINEER PRIOR TO CONSTRUCTION OF FOUNDATION SO REVISIONS TO THE FOUNDATION CAN BE MADE.
12. ROOF TRUSS BRACING: PROVIDE PERMANENT 2x4 LATERAL "X" BRACING IN THE PLANE OF THE WEBS AND FRAME AT A 45 DEG. ANGLE. ALL CONNECTIONS SHALL BE MADE WITH A MINUMUM OF (2) 16d NAILS. THE "X" BRACING SHALL BE ALIGN WITH THE BOTTOM CHORD LATERAL BRACING AND OCCUR AT EACH END OF THE BUILDING END AT 20' INTERVALS.
13. FLOOR TRUSS BRACING: PROVIDE 2x4 CONTINUOUS STRONGBACK AND "X" BRACING AS REQUIRED BY TRUSS DESIGN.

F. STRUCTURAL STEEL

1. MATERIALS:
   A. STRUCTURAL STEEL:
      W SECTIONS ASTM- A992
      HSS SECTIONS ASTM- A500 GRADE B
      ALL OTHER SECTIONS ASTM- A36
      HIGH STRENGTH BOLTS: ASTM A325 OR A490
      ANCHOR BOLTS: ASTM A307 OR A36:
      ELECTRODES: SERIES E70
      STRUCTURAL PIPES: ASTM A53 OR A501, FY = 42 KSI
      EXPANSION BOLTS: HILTI "KWIK BOLTS" OR APPROVED EQUAL.
2. SPECIFICATIONS: WELDING PERSONNEL AND PROCEDURES ARE TO BE QUALIFIED PER AWS D1.1. UNLESS SPECIFICALLY SHOWN OTHERWISE, DESIGN, FABRICATION AND ERECTION TO BE GOVERNED BY
   A. AISC SPECIFICATION FOR STRUCTURAL STEEL BUILDINGS LATEST EDITION.
   B. AISC CODE OF STANDARD PRACTICE LATEST EDITION.
   C. STRUCTURAL WELDING CODE, AWS D1.1-88 OF THE AMERICAN WELDING SOCIETY.
   D. SPECIFICATIONS FOR STRUCTURAL JOINTS USING ASTM A325 OR A490 BOLTS
3. CONNECTIONS:
   A. CONNECTIONS TO BE DESIGNED BY THE FABRICATOR TO DEVELOP FULL STRENGTH OF MEMBER. FOLLOW INSTRUCTIONS ON DRAWINGS FOR GENERAL ARRANGEMENT OR PARTICULAR DETAILS. FIELD CONNECTIONS TO BE BOLTED. SHOP CONNECTIONS TO BE WELDED OR BOLTED.
   B. FULL PENETRATION AND PARTIAL PENETRATION FIELD WELDS IN MATERIAL OVER 5/16 INCH THICK SHALL BE SUBJECT TO NON-DESTRUCTIVE TESTING (OTHER THAN VISUAL INSPECTION) BY AN INDEPENDENT LABORATORY.
   C. ALL BOLTS IN BRACED FRAMES AND BOLTS IN SHEAR CONNECTIONS USED IN CONJUNCTION WITH FULL PENETRATION FLANGE WELDS SHALL BE SLIP CRITICAL (FRICTION) TYPE.
4. PAINT:
   A. DO NOT PAINT ANY STEEL WHICH WILL BE CONCEALED FROM VIEW. PAINT ALL VISIBLE STEEL GRAY.
5. GALVANIZING: ALL SHELF ANGLES, LINTELS IN EXTERIOR WALLS, AND ALL EXTERIOR STEEL EXPOSED TO THE ELEMENTS SHALL BE GALVANIZED.
6. MISCELLANEOUS:
   A. PROVIDE HOLES FOR OTHERS. IF OPENING IS NOT SHOWN ON THE STRUCTURAL DRAWINGS, OBTAIN PRIOR APPROVAL.
   B. STEEL SUPPORTING OR CONNECTED TO HVAC AND OTHER EQUIPMENT AND ROOF OPENINGS AS SHOWN ON THE DRAWINGS IS SHOWN FOR BIDDING PURPOSES ONLY. CONTRACTOR SHALL RECONCILE EXACT SIZE AND LOCATION BEFORE PROCEEDING WITH HIS WORK.
   C. GROUT UNDER BEARING PLATES, BASE PLATES, AND SETTING PLATES TO BE NON-SHRINKING TYPE.
   D. STEEL BELOW GRADE TO BE PROTECTED BY A MINIMUM OF 3 INCHES OF CONCRETE.
   E. PROVIDE 1/4 INCH THICK SETTING PLATES FOR ALL BEAMS BEARING ON MASONRY WHICH DO NOT REQUIRE A BEARING PLATE.
   F. PROVIDE SHOP WELDED ANCHORS FOR ATTACHMENTS OF MASONRY. SPACING TO BE 16 INCHES ON COLUMNS AND BEAMS.
   G. PROVIDE HEAVY WASHER AT ALL ANCHOR BOLTS.
   H. FINISH ENDS OF ALL COLUMNS, STIFFENERS AND ALL OTHER MEMBERS IN DIRECT BEARING.
   I. PROVIDE BOLT HOLES FOR JOISTS BOLTED TO BEAMS AND ATTACHMENT FOR JOINING EXTENDED JOIST BOTTOM CHORDS.
   J. MINIMUM BEAM BEARING ON MASONRY = 8 INCHES UNLESS NOTED OTHERWISE.
   L. EMBEDMENT LENGTH OF EXPANSION BOLTS INTO SOLID MASONRY OR CONCRETE SHALL BE AS FOLLOWS:
      1/2 INCH DIAMETER BOLTS --- 3 1/2 INCHES EMBEDMENT
      3/4 INCH DIAMETER BOLTS --- 5 INCHES EMBEDMENT

G. WELDING:

1. REFERENCES:
   A. AWS D1.1-86 - "STRUCTURAL WELDING CODE - STEEL"
   B. AWS D1.3-81 - "STRUCTURAL WELDING CODE - SHEET STEEL"
2. ALL WELDING BY AWS QUALIFIED OPERATORS.

A. GENERAL

1. THE STRUCTURE IS DESIGNED TO BE SELF-SUPPORTING AND STABLE AFTER THE BUILDING IS FULLY COMPLETED. IT IS SOLELY THE CONTRACTOR'S RESPONSIBILITY TO DETERMINE ERECTION PROCEDURE AND SEQUENCE AND TO INSURE THE SAFETY OF THE BUILDING AND ITS COMPONENT PARTS DURING ERECTION. THIS INCLUDES THE ADDITION OF WHATEVER SHORING, SHEETING, TEMPORARY BRACING, GUYS OR TIE DOWNS WHICH MIGHT BE NECESSARY. SUCH MATERIAL SHALL REMAIN THE CONTRACTOR'S PROPERTY AFTER THE COMPLETION OF THE PROJECT.
2. IT IS SOLELY THE CONTRACTOR'S RESPONSIBILITY TO FOLLOW ALL APPLICABLE SAFETY CODES AND REGULATIONS DURING ALL PHASES OF CONSTRUCTION.
3. EQUIPMENT FRAMING LOADS, OPENINGS AND STRUCTURE IN ANY WAY RELATED TO HVAC, PLUMBING, OR ELECTRICAL REQUIREMENTS ARE SHOWN FOR BIDDING PURPOSES ONLY. CONTRACTOR SHALL OBTAIN APPROVAL OF THE INVOLVED TRADES BEFORE PROCEEDING WITH SUCH PORTION OF THE WORK. EXCESS COST RELATED TO VARIATION IN THESE REQUIREMENTS TO BE BORNE BY THE APPROPRIATE CONTRACTOR.
4. SHOULD ANY OF THE DETAILED INSTRUCTIONS SHOWN ON THE PLANS CONFLICT WITH THESE STRUCTURAL NOTES, THE SPECIFICATIONS, OR WITH EACH OTHER, THE STRICTEST PROVISION SHALL GOVERN.

B. ENGINEERING DESIGN CRITERIA

BUILDING CODE: INTERNATIONAL BUILDING CODE (IBC) 2009.
SECTION 1603: CONSTRUCTION DOCUMENTS
1603.1.1 FLOOR LIVE LOAD:

A. LOBBIES	100 PSF
B. OFFICES	50 PSF
C. RESTROOMS	50 PSF
D. STACK ROOMS	150 PSF

1603.1.2 ROOF LIVE LOAD:
A. MINIMUM ROOF LIVE LOAD = 20 PSF
1603.1.3 ROOF SNOW LOAD:
A. FLAT ROOF SNOW LOAD, Pf= 0 PSF
B. SNOW EXPOSURE FACTOR, Ce= 0.9
C. SNOW LOAD IMPORTANCE FACTOR, I= 1.0
D. THERMAL FACTOR, Ct= 1.0
1603.1.4 WIND DESIGN DATA:
A. BASIC WIND SPEED (3-SECOND GUST) = 90 MPH
B. WIND IMPORTANCE FACTOR, I = 1.15
C. OCCUPANCY CATEGORY= III
D. WIND EXPOSURE= B
E. INTERNAL PRESSURE COEFFICIENT= +/- 0.18
F. COMPONENTS AND CLADDING NET DESIGN WIND PRESSURE (PSF):

ZONE	1	2	3	4	5
WALLS:				-17.5	-19.5
ROOFS:	-17.2	-28.1	-39.3		
OVERHANGS:		-26.6	-35.0		

1603.1.5 EARTHQUAKE DESIGN DATA:
A. SEISMIC IMPORTANCE FACTOR, I= 1.25
B. MAPPED SPECTRAL RESPONSE ACCELERATION, Ss=8.6 AND S1=2.2
C. SITE CLASS= D
D. SPECTRAL RESPONSE COEFFICIENTS, Sds=0.0917 AND Sd1=0.0352
E. SEISMIC DESIGN CATEGORY= A
F. BASIC SEISMIC-FORCE-RESISTING SYSTEM(S)= LIGHT FRAMED WALLS SHEATED WITH WOOD STRUCTURAL PANELS RATED FOR SHEAR RESISTANCE
G. DESIGN BASE SHEAR=
H. SEISMIC RESPONSE COEFFICIENT(S), Cs= 0.0573
I. RESPONSE MODIFICATION FACTOR(S), R= 2.5
J. ANALYSIS PROCEDURE USED= EQUIVALENT LATERAL FORCE PROCEDURE
1603.1.6 GEOTECHNICAL INFORMATION:
A. ALLOWABLE SOIL BEARING CAPACITY= 1,000 PSF TOTAL LOAD ON SELECT FILL
1603.1.7 FLOOD DESIGN DATA:
A. NOT APPLICABLE.
1603.1.8 SPECIAL LOADS:
A. NOT APPLICABLE.
1603.1.9 SYSTEMS AND COMPONENTS REQUIRING SPECIAL INSPECTIONS FOR SEISMIC RESISTANCE:
A. NOT APPLICABLE.

C. GENERAL NOTES FOR SITE PREPARATION

1. REFER TO CIVIL AND ARCHITECTURAL PLANS FOR FINISH FLOOR ELEVATION.
2. STRIP TOP SOIL A MINIMUM OF 6" AND EXTENDING AT LEAST 3 FT. BEYOND THE BUILDING PERIMETER. REMOVE ALL ORGANIC MATERIAL, ROOTS, GRASS ETC. FROM THE SITE PRIOR TO STARING FOUNDATION WORK. ANY SOFT AREAS IN THE EXPOSED SUBGRADE AFTER STRIPPING OR AFTER REMOVAL OF ANY EXISTING FACILITIES SHALL BE REMOVED AND REPLACED WITH SUITABLE MATERIAL UNDER CONTROLLED CONDITIONS.
3. EXPOSED SUBGRADE SHOULD BE SCARIFIED JUST PRIOR TO FILL PLACEMENT TO A MINIMUM DEPTH OF 8" AND RECOMPACTED TO A MINIMUM OF 95% OF THE MAXIMUM DENSITY AS DETERMINED BY ASTM D698 COMPACTION TEST WITH A MOISTURE CONTENT BETWEEN MINUS TWO (-2) TO PLUS THREE (+3) OF OPTIMUM.
4. SELECT FILL MATERIALS SHALL CONSIST OF INORGANIC SILTY CLAYS OR SANDY CLAYS WITH A LIQUID LIMIT (LL) OF LESS THAN 35 AND A PLASTICITY INDEX (PI) BETWEEN SEVEN (7) AND EIGHTEEN (18).
5. SELECT FILL SHALL BE FILL COMPACTED IN LIFTS NOT TO EXCEED SIX (6) INCHES IN THICKNESS TO A MINUMUM OF 95% OF STANDARD (ASTM D698) COMPACTION, WITHIN THE RANGE OF MINUS TWO (-2) TO PLUS THREE (+3) PERCENTAGE POINTS ABOVE OPTIMUM MOISTURE CONTENT VALUE.
6. REFER TO GEOTECHNICAL ENGINEERING STUDY PREPARED BY CARRILLO AND ASSOCIATES INC. PROJECT NUMBER 72-199 DATED FEBRUARY 22, 2012.
7. THE SOILS ENGINEER SHALL BE THE OWNERS REPRESENTATIVE TO CONTROL THE PLACEMENT OF COMPACTED FILL. THE SOILS ENGINEER SHALL APPROVE THE SUBGRADE PREPARATION, THE FILL MATERIALS, THE METHOD OF PLACEMENT AND COMPACTION, AND SHALL GIVE WRITTEN APPROVAL OF THE COMPLETED FILL
8. PROVIDE DENSITY TESTING ON THE SUBGRADE SOILS AND THE SELECT FILL AT EVERY LIFT AND FOR EACH 2,500 SF OF SLAB AREA, OR A MINIMUM OF 3 DENSITY TEST PER TESTING INTERVAL, WHICHEVER IS GREATER. ANY AREAS NOT MEETING THE REQUIRED COMPACTION SHOULD BE RECOMPACTED AND RETESTED UNTIL COMPLIANCE IS MET.
9. OBSERVATION OF REINFORCEMENT PLACEMENT WILL NEED TO BE PROVIDED BY SYNERGY STRUCTURAL ENGINEERING, INC. BEFORE CONCRETE POUR. THE FOLLOWING ITEMS WILL NEED TO BE PROVIDED BY CONTRACTOR AND/OR OWNER BEFORE REBAR OBSERVATION:
   A. COMPACTION REPORTS OF SUBGRADE AND SUBSEQUENT LIFTS PERFORMED BY AN APPROVED TESTING LABORATORY.
   B. COMPACTION AND INSPECTION REPORTS BY AN APPROVED TESTING LABORATORY FOR THE BACKFILLING OF THE TRENCHES OF PLUMBING OR ELECTRICAL LINES.
   **FAILING TO PROVIDE COMPACTION REPORTS WILL VOID ANY WARRANTIES AND/OR LIABILITIES DESCRIBED IN THESE PLANS AND/OR PROPOSAL-AGREEMENT BETWEEN OWNER/CONTRACTOR AND SYNERGY STRUCTURAL ENGINEERING, INC.

D. REINFORCED CONCRETE

1. MATERIALS:
   A. SPECIFICATIONS: IN GENERAL, COMPLY WITH ACI 301-LATEST EDITION "SPECIFICATIONS FOR STRUCTURAL CONCRETE FOR BUILDINGS."
   B. STRUCTURAL CONCRETE

CONCRETE TYPE	DESIGN STRENGTH	MAXIMUM SLUMP	MAXIMUM AGGREGATE	MAXIMUM W/C RATIO AIR ENTR.	NO AIR ENTR.
SLAB ON GRADE	3000 PSI	4"	1"	0.4	0.5
GRADE BEAMS	3000 PSI	5"	1-1/2"	0.5	0.6

   * ALL MIXES SHALL HAVE A MINIMUM OF 5-1/2 SACKS OF CEMENT PER CUBIC YARD REGARDLESS OF STRENGTH OBTAINED.
   C. ALL DEFORMED REINFORCING BARS (ASTM A 615): FY = 60,000
   D. WELDED WIRE FABRIC SHALL CONFORM TO ASTM A165-85. (SHEET FORM, NOT ROLLED)
2. FIELD MANUAL: PROVIDE AT LEAST ONE COPY OF THE ACI FIELD REFERENCE MANUAL, SP-15, IN THE FIELD OFFICE AT ALL TIMES.
3. CONTINGENCIES:
   A. PROVIDE SUPPORTS AS REQUIRED TO MAINTAIN ALIGNMENT OF SCHEDULED REINFORCING. SUCH SUPPORTS ARE TO BE REFLECTED IN THE BID.
4. FOOTINGS:
   A. DOWELS IN FOOTINGS TO MATCH VERTICAL WALL REINFORCING.
   B. PROVIDE LEAN CONCRETE (CLASS IV) UNDER FOUNDATIONS FOR ACCIDENTAL OVER-EXCAVATION, SOFT SPOTS AND TRENCHES.
5. SPLICES: UNLESS NOTED OTHERWISE, LAP SPLICES AND EMBEDMENTS SHALL BE CLASS B, CASE 1 AS SHOWN ON TABLE.
6. CONSTRUCTION JOINTS:
   A. CONSTRUCTION JOINTS PERMITTED ONLY WHERE SHOWN OR AS APPROVED BY THE STRUCTURAL ENGINEER. ALL CONSTRUCTION JOINTS ARE TO BE KEYED. KEYWAYS SHALL BE 1-1/2 INCHES DEEP X 1/3 MEMBER THICKNESS.
7. CONCRETE COVER: UNLESS NOTED OTHERWISE, DETAIL REINFORCING TO PROVIDE CONCRETE COVER AS FOLLOWS:
   A. CONCRETE CAST AGAINST AND PERMANENTLY EXPOSED TO EARTH: 3 IN.
   B. CONCRETE EXPOSED TO EARTH OR WEATHER: #5 BARS AND SMALLER 1 1/2 IN.; OTHERS 2 IN.
   C. CONCRETE NOT EXPOSED TO EARTH OR WEATHER: SLABS, WALLS, AND #11 BARS & SMALLER 1 IN.; OTHERS 1 1/2 IN.
8. PROVIDE LATICRETE BLUE 92 ANTI-FRACTURE MEMBRANE AT ALL BRITTLE FINISH FLOORS.

GENERAL NOTES | 12

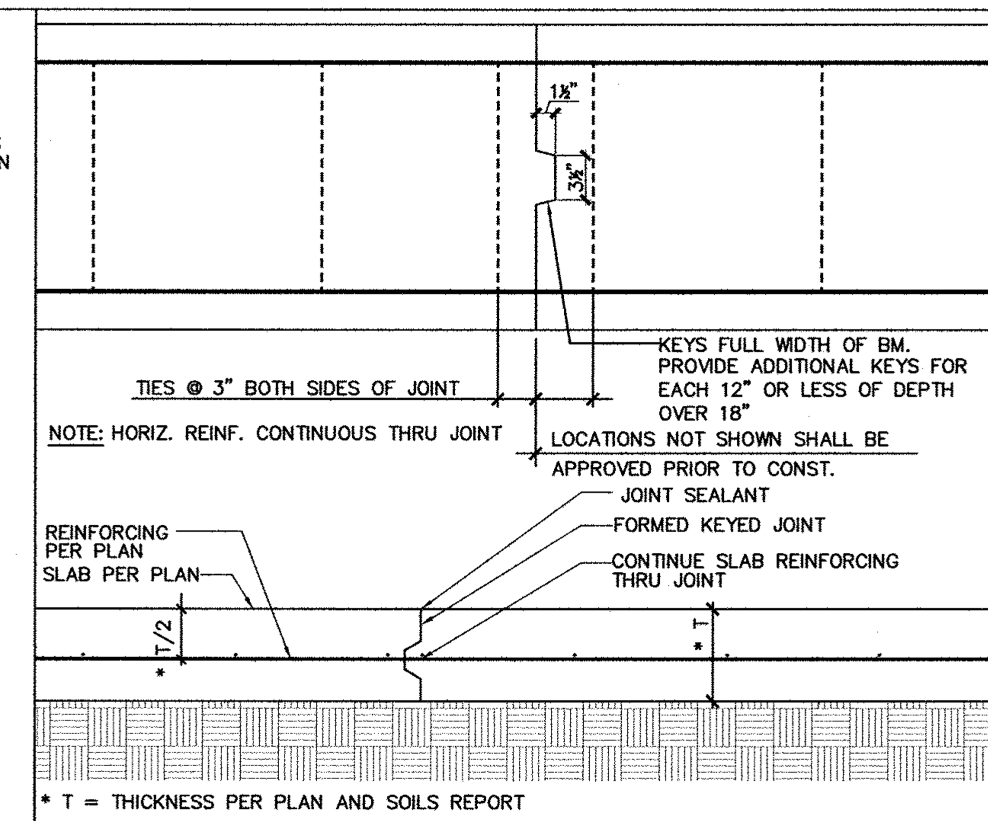

GRADE BEAM AND SLAB CONSTRUCTION JOINT | 5

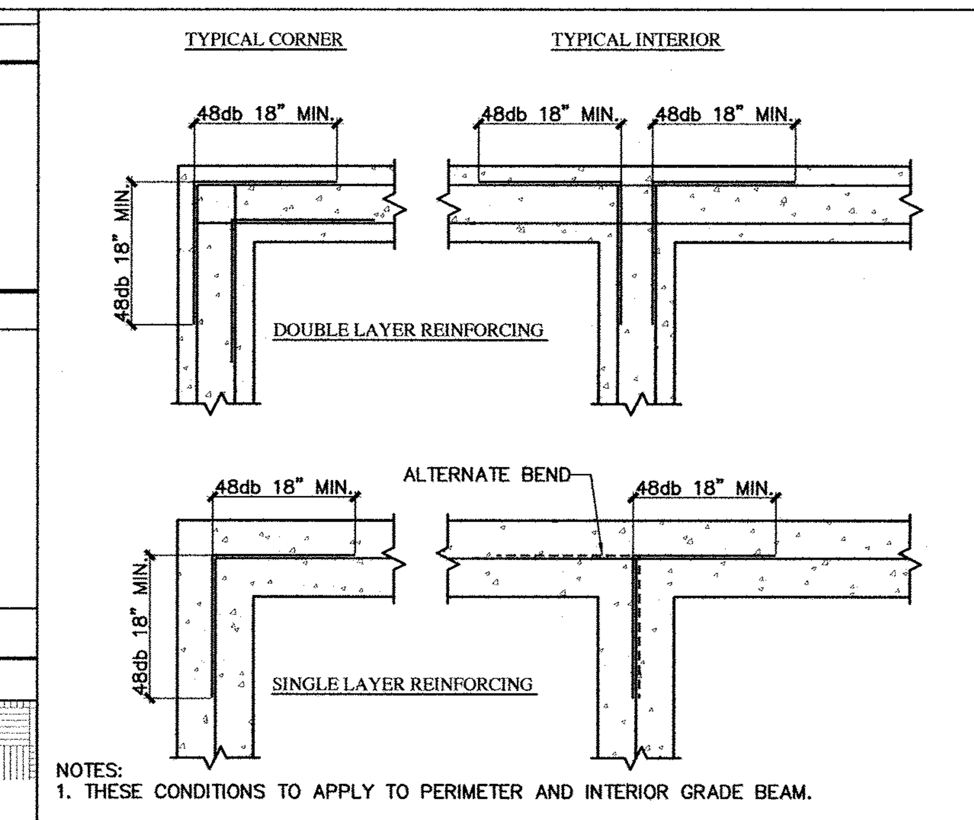

TYP. REINFORCING AT INT. OF CONCRETE FOOTINGS | 1

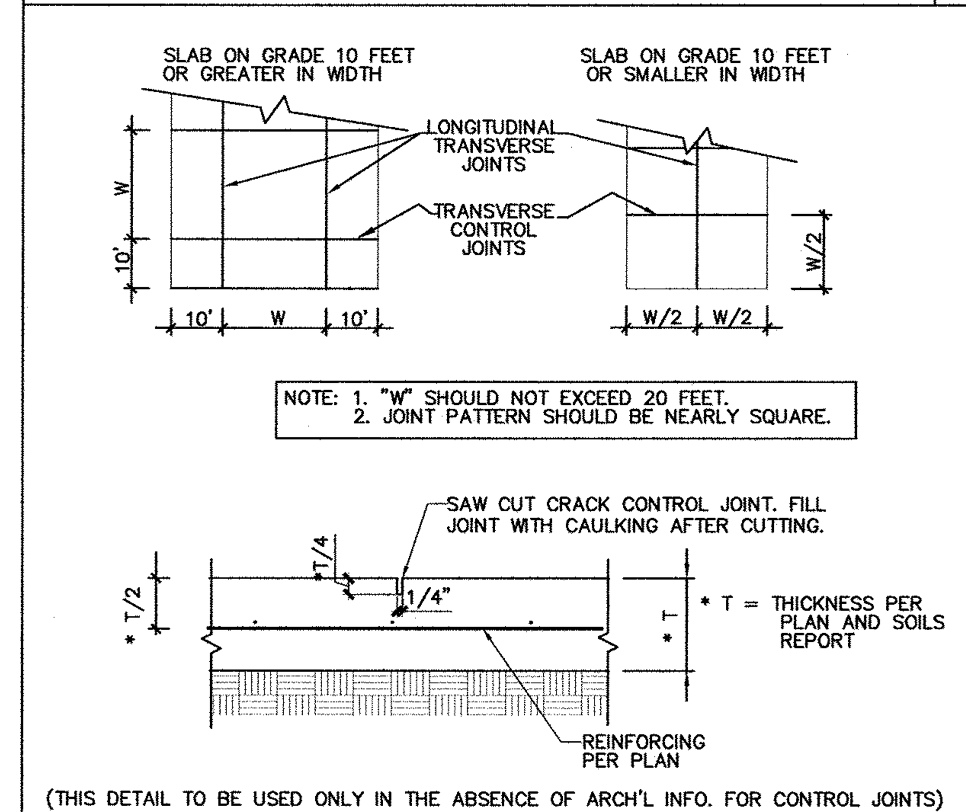

SLAB CONTROL JOINT DETAIL | 6

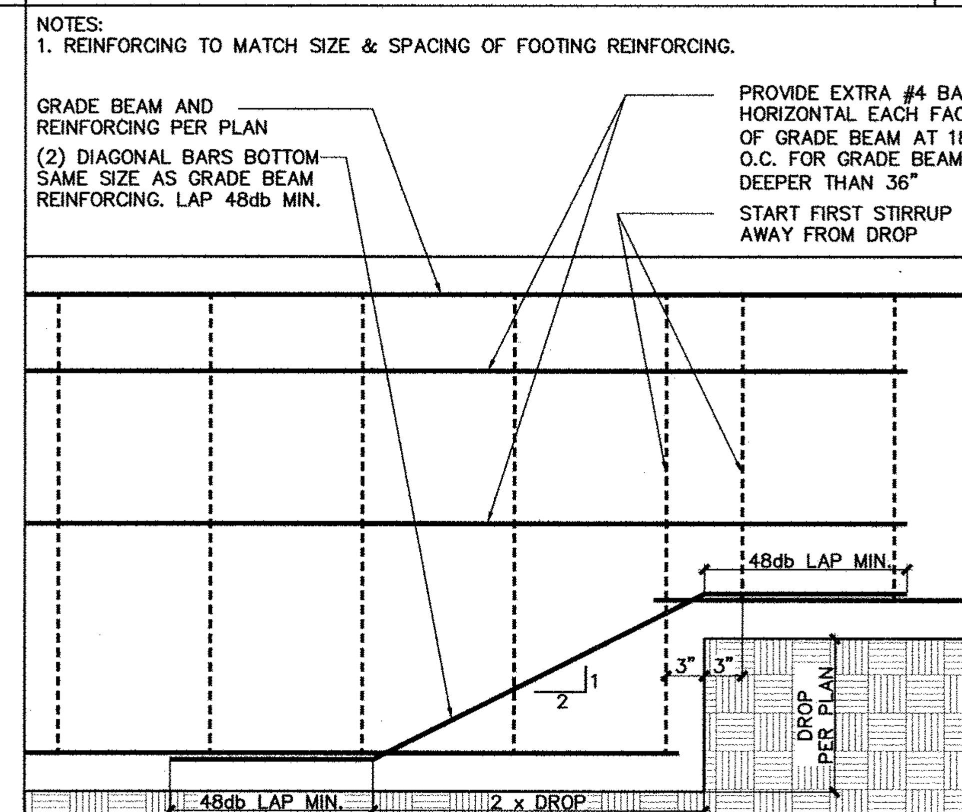

TYPICAL STEPPED WALL/ GRADE BEAM | 2

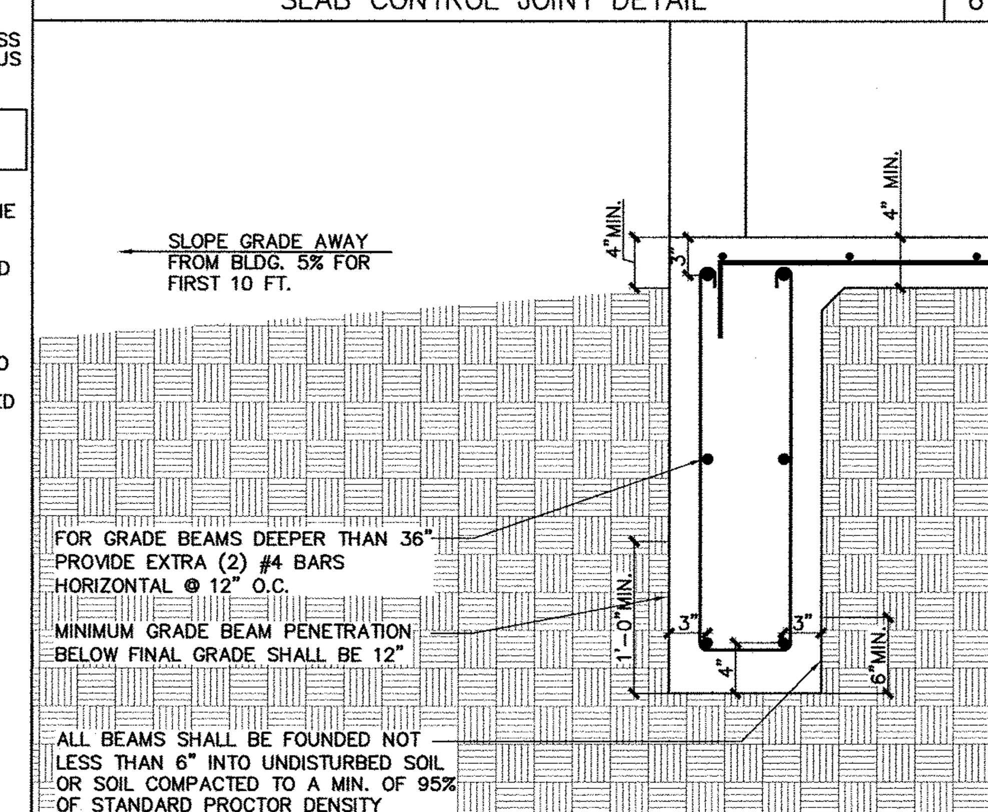

MINIMUM GRADING AT PERIMETER GRADE BEAMS | 7

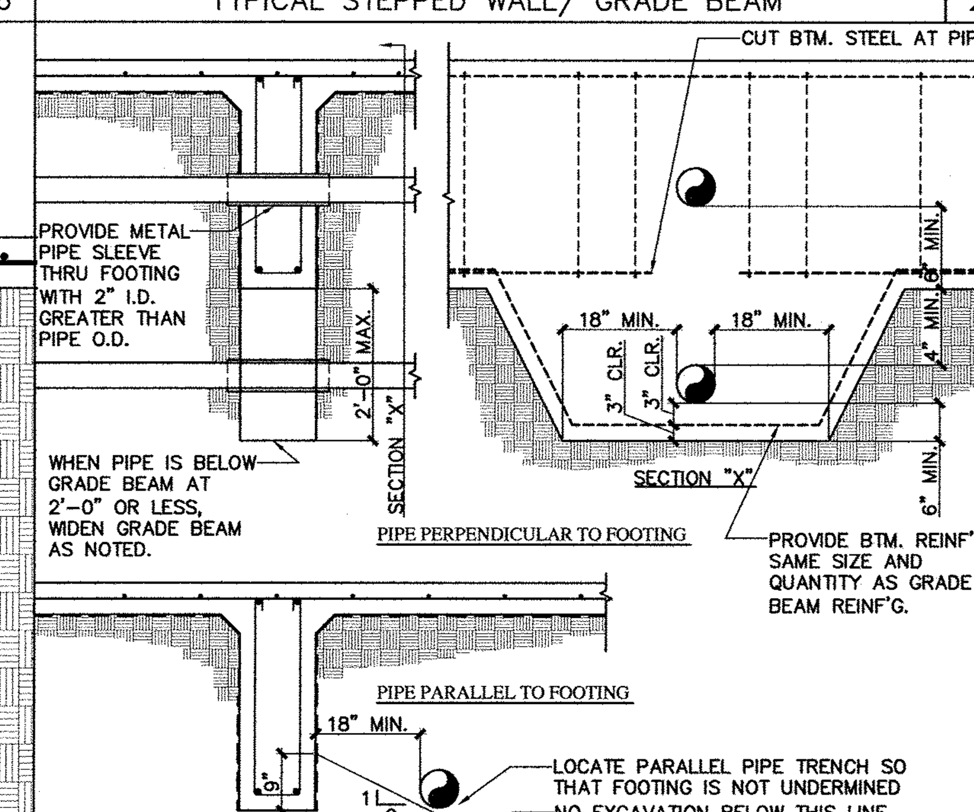

DETAIL OF PIPING SLEEVE AT FOOTING | 3

REINFORCEMENT TENSION LAPS AND EMBEDMENT
(fy=60,000 PSI f'c=3,000 PSI)

BAR SIZE	BAR DIA. (IN)	EMBEDMENT AND CLASS A LAP (IN) TOP BAR CASE 1	CASE 2	OTHER BARS CASE 1	CASE 2	CLASS B LAP (IN) TOP BAR CASE 1	CASE 2	OTHER BARS CASE 1	CASE 2
#3	3/8	22	32	14	25	28	42	22	32
#4	1/2	29	43	22	33	37	56	29	43
#5	5/8	36	54	28	41	47	74	36	54
#6	3/4	43	64	33	50	56	84	43	64
#7	7/8	63	94	48	72	81	122	63	94
#8	1	72	107	55	82	93	134	72	107
#9	1-1/8	81	121	62	93	105	157	81	121
#10	1-1/4	91	136	70	105	118	177	91	136
#11	1-3/8	101	151	78	116	131	196	101	151

NOTES:
1. TABLE REPRESENTS LENGTHS OF TENSION DEVELOPMENT LENGTHS AND TENSION LAP SPLICES LENGTHS BASED ON AC1 318-08 SECTION 12.2.2.
2. CLASS A LAP LENGTHS APPLY WHEN BARS LAPS ARE STAGGERED TO LAP HALF THE BARS AT THE SAME LOCATION OR WHEN BARS ARE LAPPED AT A LOCATION WHERE THE REINFORCEMENT AREA PROVIDED IS AT LEAST TWICE THAT REQUIRED.
3. CLASS B LAP LENGTHS APPLY WHEN ALL BARS ARE SPLICED AT A LOCATION OF MAXIMUM STRESS IN THE BARS.
4. CASE 1 LENGTHS APPLY TO BEAMS AND COLUMNS WITH CONCRETE COVER EQUAL OR GREATER THAN THE BAR DIAMETER, CLEAR BAR SPACING EQUAL OR GREATER THAN THE BAR DIAMETER AND WITH STIRRUPS OR TIES NOT LESS THAN THE CODE MINIMUM THROUGHOUT THE LENGTH IN THE TABLE, AND FOR OTHER ELEMENTS WITH CONCRETE COVER EQUAL OR GREATER THAN THE BAR DIAMETER AND CLEAR SPACING EQUAL OR GREATER THAN TWO TIMES THE BAR DIAMETER.
5. CASE 2 LENGTHS APPLY TO BEAMS AND COLUMNS WITH CONCRETE COVER LESS THAN THE BAR DIAMETER, AND CLEAR BAR SPACING LESS THAN THE BAR DIAMETER, AND FOR OTHER ELEMENTS WITH CONCRETE COVER LESS THAN THE BAR DIAMETER AND CLEAR BAR SPACING LESS THAN TWO TIMES THE BAR DIAMETER.
6. TOP BARS ARE HORIZONTAL REINFORCEMENT PLACED SO THAT MORE THAN 12 INCHES OF CONCRETE IS CAST BELOW THE REINFORCEMENT.
7. MULTIPLY LENGTHS SHOWN BY 0.87 FOR 4000 PSI CONCRETE.
8. MULTIPLY LENGTHS SHOWN BY 1.3 FOR LIGHTWEIGHT AGGREGATE CONCRETE.
9. MULTIPLY LENGTHS SHOWN BY 1.3 FOR EPOXY-COATED BARS.

REINFORCEMENT TENSION LAPS AND EMBEDMENT | 8

STATE OF TEXAS
VICTOR M. DeANDA JR.
92641
LICENSED PROFESSIONAL ENGINEER
02/29/12

THE SEAL APPEARING ON THIS DOCUMENT WAS AUTHORIZED BY VICTOR M. DE ANDA JR., P.E. 92641 EXPIRES ON 09/30/2012.

SSE
SYNERGY STRUCTURAL ENGINEERING, INC.
901 VICTORIA ST. SUITE "C"
LAREDO, TX. 78040
(956) 753-5860 (fax) 753-6210
synergy@synergy-se.com
TBPE Firm Registration No.: F-7661

HICKEY PEÑA & ARCHITECTS
ARCHITECTS PLUS, INC.

These drawings and specifications are and shall remain the property of the Engineer. They may not be reused, reproduced or altered in any way without prior written approval from and with appropriate compensation to the Engineer.

JUSTICE OF THE PEACE PRECINCT 4
ADDITION AND RENOVATION
COUNTY OF WEBB
CITY OF LAREDO

Drawn by: VDA
Checked: VDA
Approved: VDA
Date: 02/29/2012
Revisions:

Job # SSE-11-060

Drawing Name:
GENERAL NOTES & TYP. FND. DETAILS

S-1

SHT. 1 OF 3

DOOR SCHEDULE

DR. NUMBER	TYPE	ROOM NAME	SIZE	THICKNESS	CONSTRUCTION	FACING & FINISH	GLASS	RATTING	FRAME		HEAD DETAIL	JAMB DETAIL	SILL DETAIL	HARDWARE SET	REMARKS
100	A	ENTRY	3'-0" X 7'-0"	1-3/4	ALUM.	GLASS	TEMPERED		ALUM.	6'-4" X 7'-2"	8/A6.0	7/A6.0	6/A6.0	BY DR. MANUF.	2 DOORS
103	C	ELECTRICAL	2'-0" X 7'-0"	1-3/4	SCW	NTRL. BIRCH			HM	4'-4" X 7'-2"	11/A6.0	10/A6.0	9/A6.0	SET #3	2 DOORS
104A	B	BREAK ROOM	3'-0" X 7'-0"	1-3/4	SCW	NTRL. BIRCH			HM	3'-4" X 7'-2"	11/A6.0	10/A6.0	9/A6.0	SET #2	
104B	D		3'-0" X 7'-0"	1-3/4	HM	MTL. PTD.	TEMPERED		HM	3'-4" X 7'-2"	8/A6.0	7/A6.0	6/A6.0	SET #1	EXTERIOR
105	B	CONFERENCE RM	3'-0" X 7'-0"	1-3/4	SCW	NTRL. BIRCH			HM	3'-4" X 7'-2"	11/A6.0	10/A6.0	9/A6.0	SET #2	
107	B	FILE ROOM	3'-0" X 7'-0"	1-3/4	SCW	NTRL. BIRCH		90 Min.	HM	3'-4" X 7'-2"	11/A6.0	10/A6.0	9/A6.0	SET #4	

HARDWARE: SECTION 08710

WINDOW SCHEDULE

	SIZE	TYPE	QNTY.	DESCRIPTION	HEAD	JAMB	SILL
A	2'-0" X 5'-4"	FIXED	8 EA.	ALUMINUM FRAME, FIXED INSULATED GLASS	3/A6.0	2/A6.0	1/A6.0
B	3'-4" X 5'-4"	FIXED	8 EA.	ALUMINUM FRAME, FIXED INSULATED GLASS	3/A6.0	2/A6.0	1/A6.0
C	3'-4" X 4'-5"	FIXED	1 EA.	ALUMINUM FRAME, FIXED INSULATED GLASS	11/A6.0	10/A6.0	9/A6.0

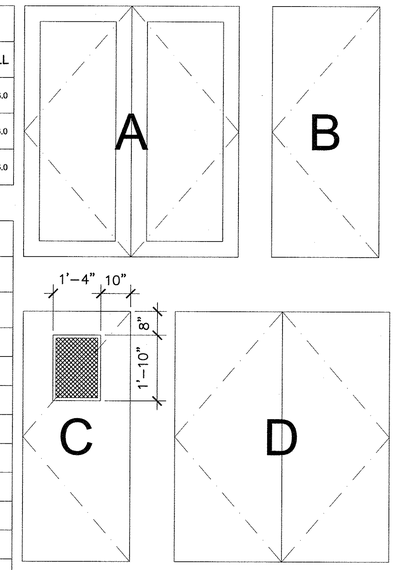

INTERIOR FINISH SCHEDULE

No.	ROOM NAME	FLOOR	BASE	WALLS				CEIL'G	CLG. HT.	REMARKS
				NORTH	EAST	SOUTH	WEST			
100	ENTRY	VCT	RB	WP	EX	WP	WP	SAP-2	9'-0"	
100A	WAITING	VCT	RB	WP	EX	WP	WP	SAP-2	9'-0"	
101	HALLWAY	VCT	RB	WP	EX	EX	EX	SAP-2	9'-0"	
102	FOYER	VCT	RB	WP	WP	WP	WP	SAP-2	9'-0"	
103	MECH	VCT	RB	P	P	P	P	SAP-2	9'-0"	
104	BREAK ROOM	VCT	RB	WP	WP	WP	WP	SAP-2	9'-0"	
105	CONFERENCE ROOM	CPT	RB	WP	WP	WP	WP	SAP-2	9'-0"	
106	BILLING	VCT	RB	WP	WP	WP	WP	SAP-2	9'-0"	
107	FILE ROOM	VCT	RB	WP	WP	WP	WP	SAP-2	9'-0"	

FINISH SCHEDULE LEGEND

FLOORING		BASE		WALL FINSHES		CEILING SYSTEMS	
CONC.	CONCRETE FINISH W/SEALER	CT	CERAMIC TILE BASE	P	PAINT	SAP-1	24" X 24" SUSPENDED ACOUSTICAL PANEL
CPT	CARPET	RB	RUBBER BASE	WP	WALL PAPER	SAP-2	24" X 48" SUSPENDED ACOUSTICAL PANEL
VCT	VINYL COMPOSITION TILE	QT	QUARRY TILE	CT	CERAMIC TILE	GYP	PAINT ON GYPSUM BD.
RT	RUBBER TILE	GCMU	GLAZED CMU (COLORED)	EX	EXISTING	EXP	EXPOSED STRUCTURE, DUCTWORK, CONDUITS
CT	CERAMIC TILE			EPX	EPOXY PAINT		PIPING, ETC. TO BE PAINTED
WP	WOOD PANEL						

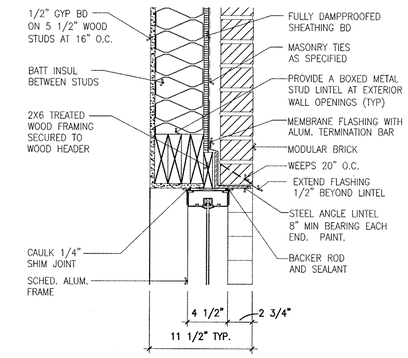

3 EXT. WDW. HEAD

SCALE: ¾" = 1'-0"

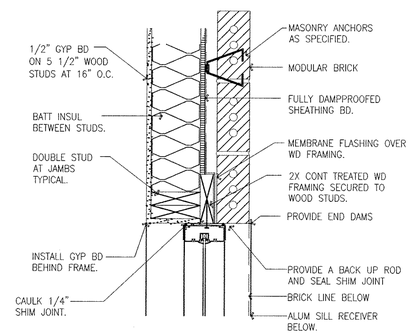

2 EXT. WDW. JAMB

SCALE: ¾" = 1'-0"

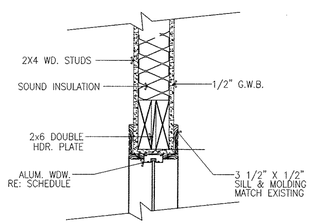

14 INT. WDW. HEAD

SCALE: 1½"= 1'-0"

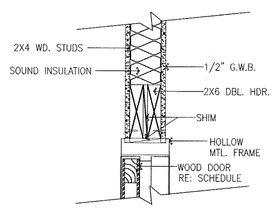

11 INT. DOOR HEAD

SCALE: 1½"= 1'-0"

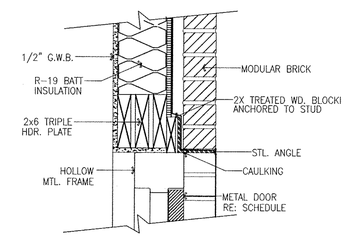

8 EXT. DOOR HEAD

SCALE: 1½"= 1'-0"

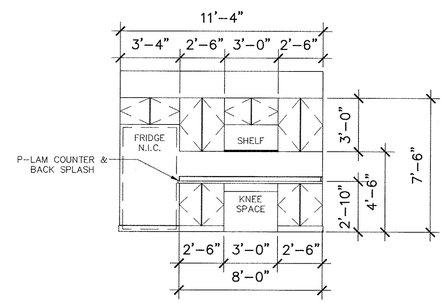

5 INTERIOR ELEVATION

SCALE: ¼" = 1'-0"

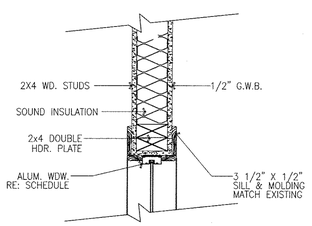

13 INT. WDW. JAMB

SCALE: 1½"= 1'-0"

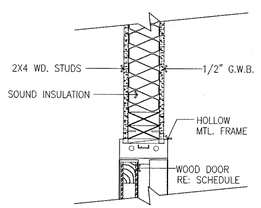

10 INT. DOOR JAMB

SCALE: 1½"= 1'-0"

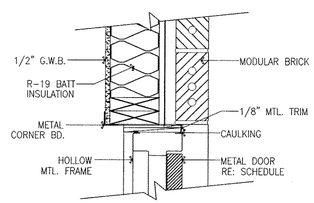

7 EXT. DOOR JAMB

SCALE: 1½"= 1'-0"

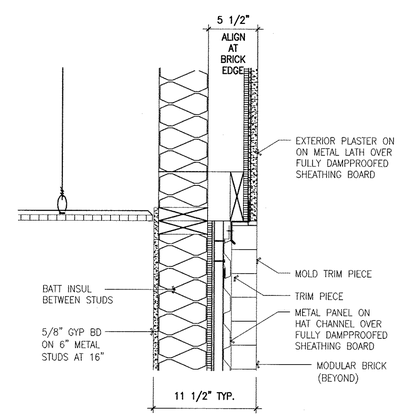

4 HEADER DETAIL – TYP.

SCALE: ¾" = 1'-0"

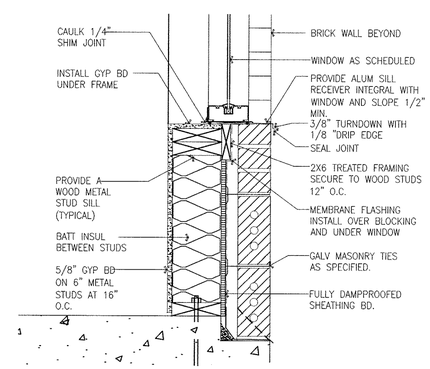

1 EXT. WDW. SILL

SCALE: ¾" = 1'-0"

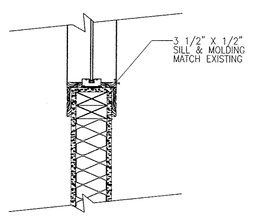

12 INT. WDW. SILL

SCALE: 1½"= 1'-0"

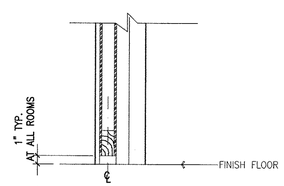

9 INT. DOOR SILL

SCALE: 1½"= 1'-0"

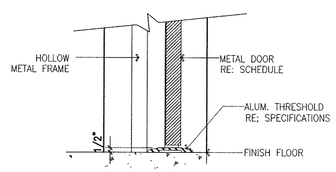

6 EXT. DOOR SILL

SCALE: 1½"= 1'-0"

HICKEY PEÑA & ARCHITECTS

ARCHITECTS PLUS, INC.

JUSTICE OF THE PEACE PRECINCT 4
ADDITION AND RENOVATION
8501 SAN DARIO AVE.
LAREDO, TEXAS 78045

REGISTERED ARCHITECT MARIO PEÑA JR. 9002 STATE OF TEXAS

5/29/12

DRAWN: HPA
CHECKED: MP
APPROVED: MJ
DATE: 2/29/2012

REVISIONS:
5/15/2012

Job # A+061204

A6.0

DETAILS

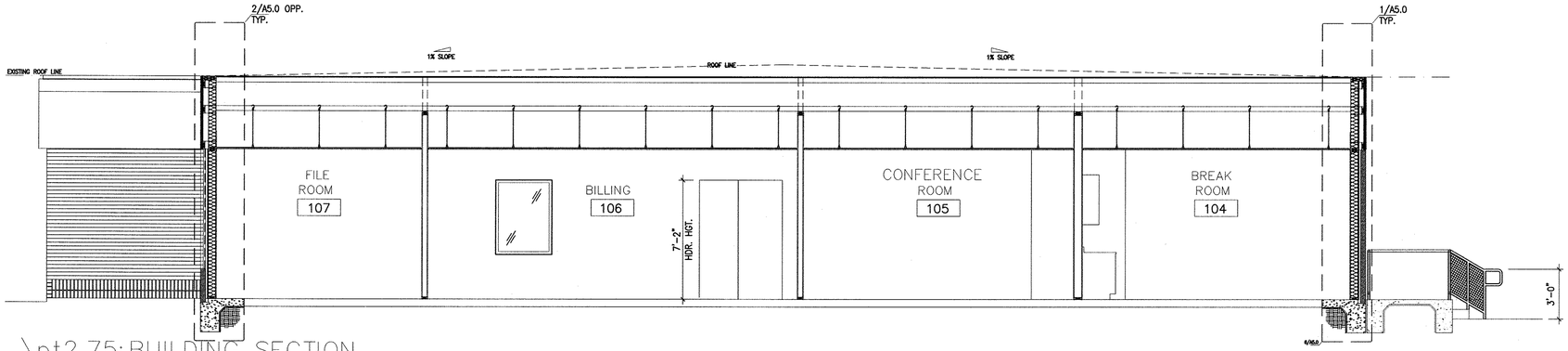

5 \pt2.75; BUILDING SECTION

SCALE: ¼" = 1'-0"

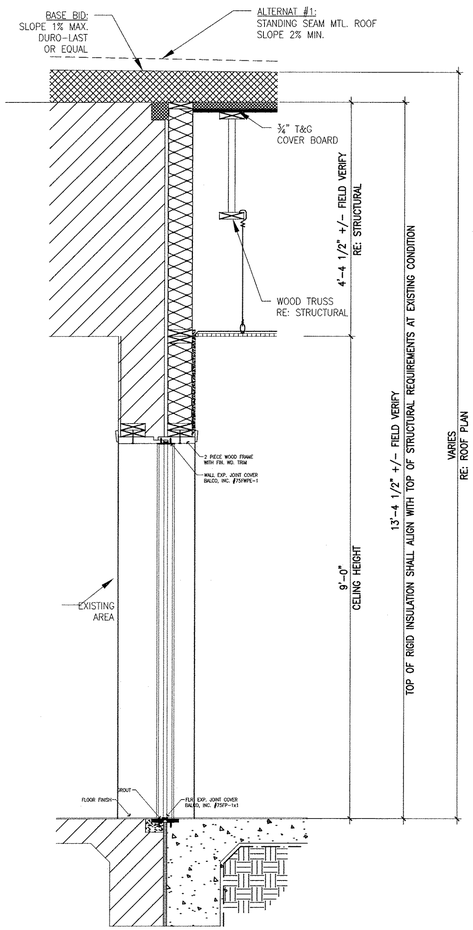

4 WALL SECTION

SCALE: ¾" = 1'-0"

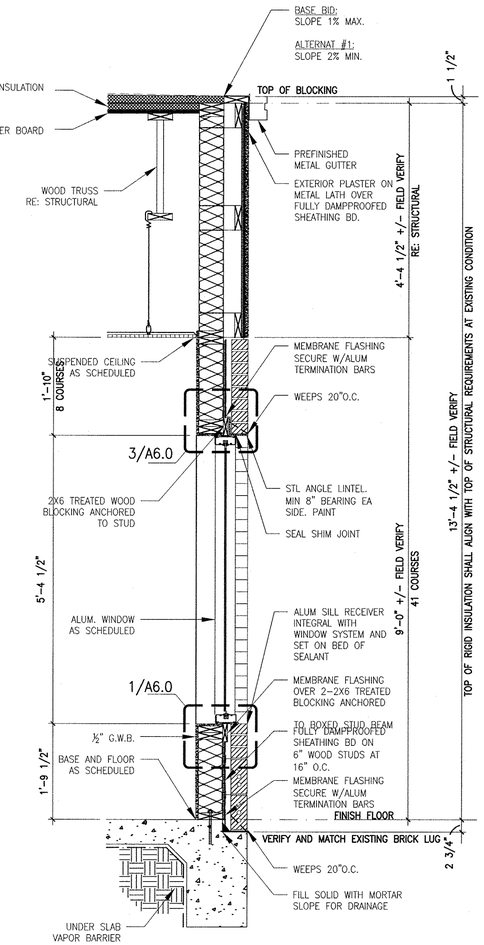

3 WALL SECTION

SCALE: ¾" = 1'-0"

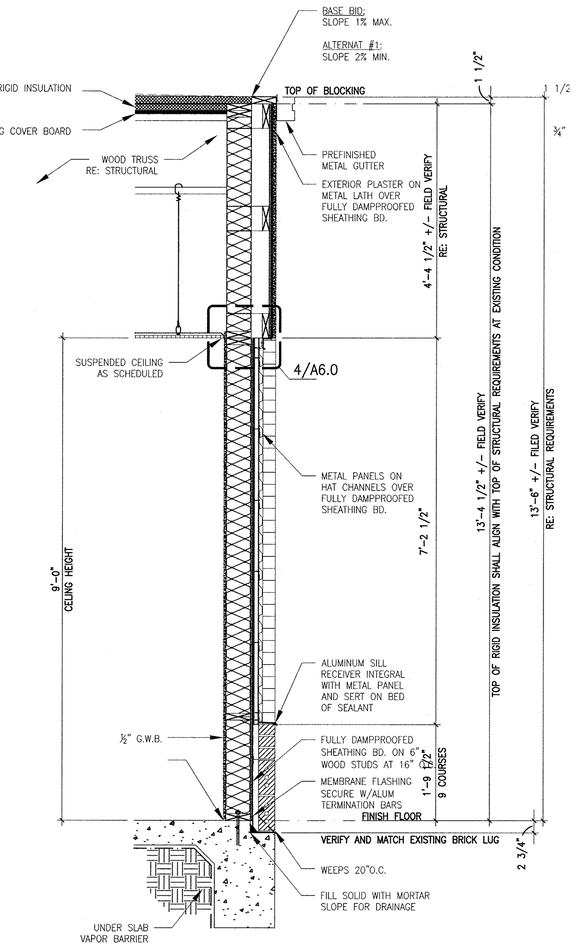

2 WALL SECTION – TYP.

SCALE: ¾" = 1'-0"

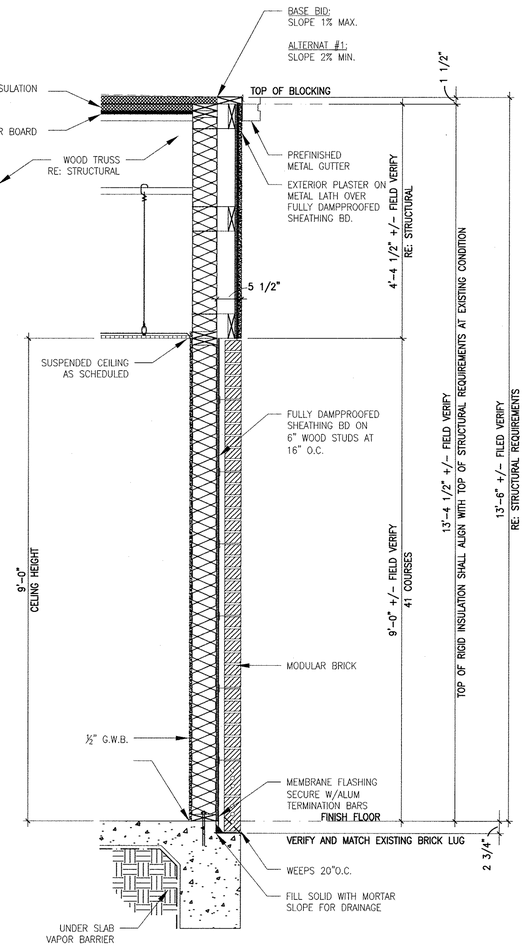

1 WALL SECTION – TYP.

SCALE: ¾" = 1'-0"

REGISTERED ARCHITECT HUMBERTO J. MARTINEZ 2002 STATE OF TEXAS

9/28/12

HICKEY PEÑA & ARCHITECTS

ARCHITECTS PLUS, INC.

JUSTICE OF THE PEACE PRECINCT 4
ADDITION AND RENOVATION

8501 SAN DARIO AVE.
LAREDO, TEXAS 78045

DRAWN: HPA
CHECKED: MP
APPROVED: MJ
DATE: 2/29/2012

REVISIONS:
5/15/2012

Job # A+061204

A5.0

BUILDING SECTIONS

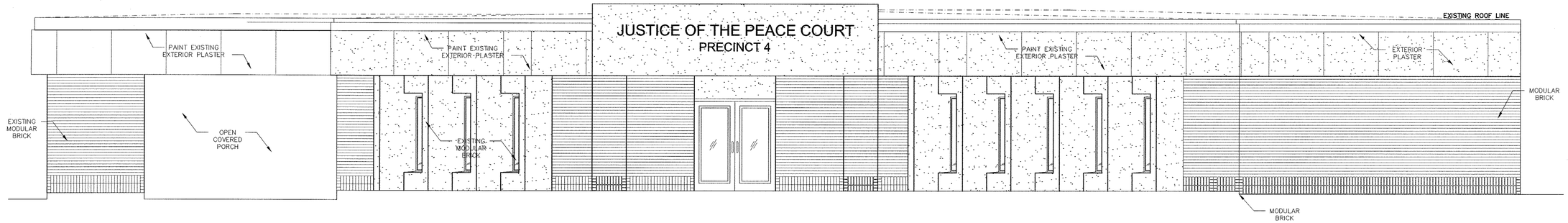

1 WEST ELEVATION

SCALE: ¼" = 1'-0"

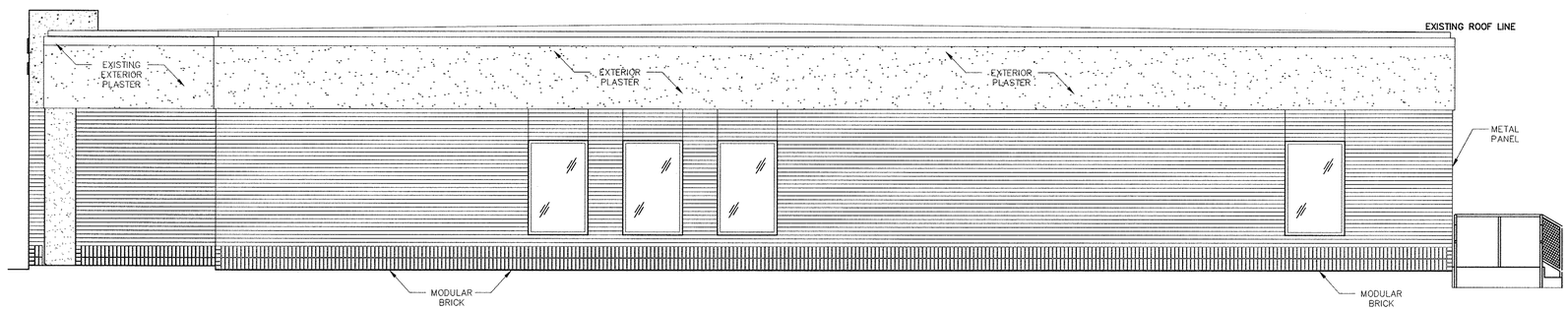

2 SOUTH ELEVATION

SCALE: ¼" = 1'-0"

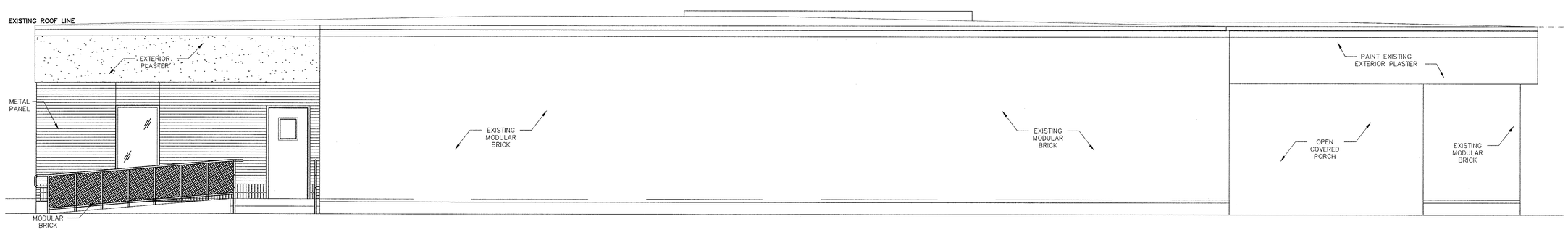

3 EAST ELEVATION

SCALE: ¼" = 1'-0"

REGISTERED ARCHITECT MARIO PEÑA JR. 9002 STATE OF TEXAS

5/29/12

HICKEY PEÑA & ARCHITECTS

ARCHITECTS PLUS, INC.

JUSTICE OF THE PEACE PRECINCT 4
ADDITION AND RENOVATION
8501 SAN DARIO AVE.
LAREDO, TEXAS 78045

DRAWN: HPA
CHECKED: MP
APPROVED: MJ
DATE: 2/29/2012
REVISIONS: 5/15/2012

Job # A+061204

A4.1

EXT. ELEVATIONS

ADDITIVE ALT. #2

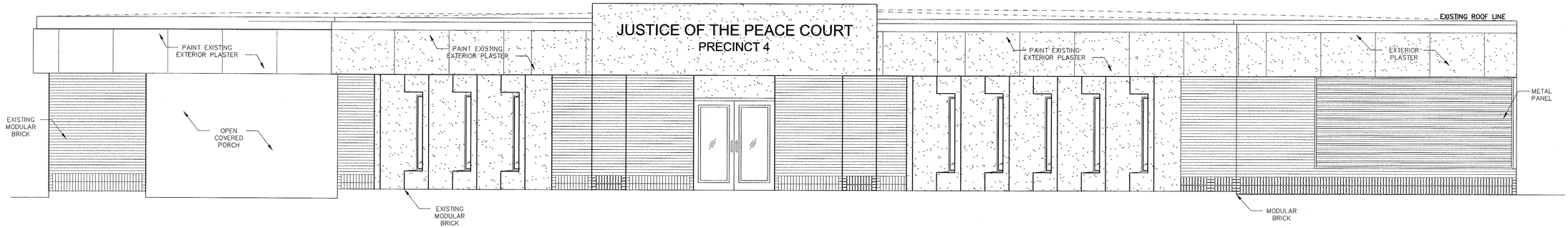

1 WEST ELEVATION

SCALE: ¼" = 1'-0"

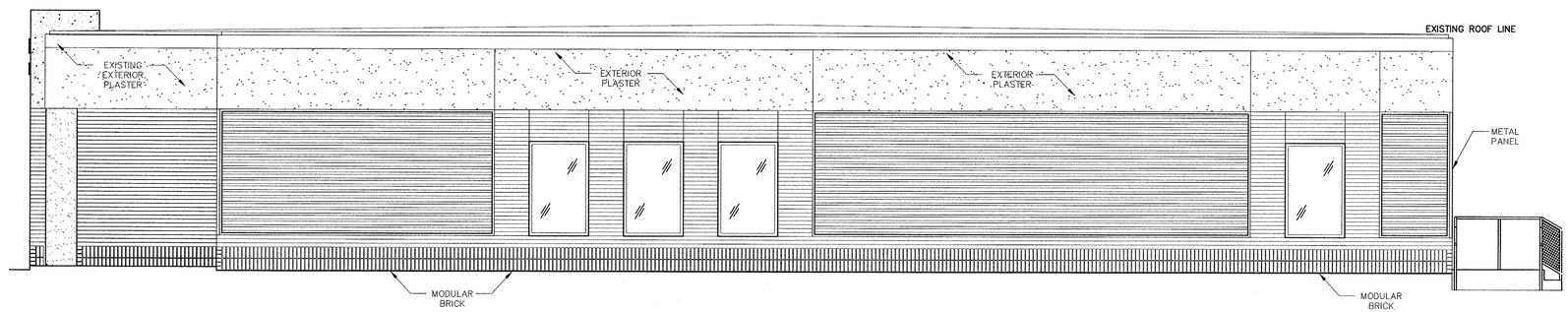

2 SOUTH ELEVATION

SCALE: ¼" = 1'-0"

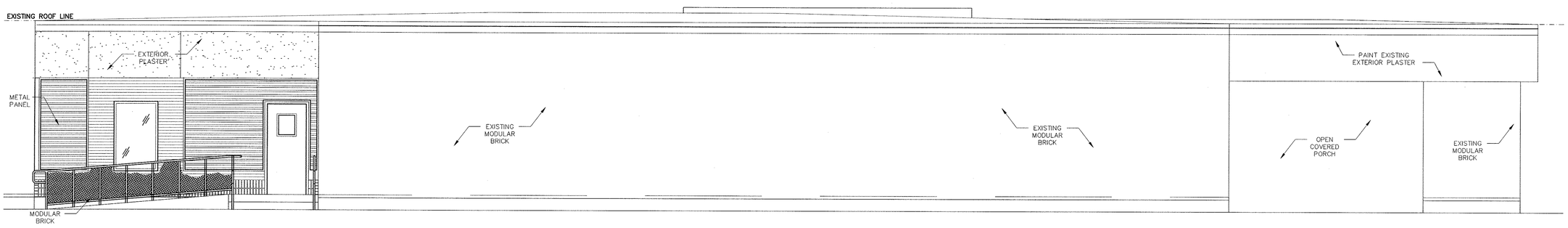

3 EAST ELEVATION

SCALE: ¼" = 1'-0"

HICKEY PEÑA & ARCHITECTS

ARCHITECTS PLUS, INC.

REGISTERED ARCHITECT
STATE OF TEXAS
9002
5/29/12

JUSTICE OF THE PEACE PRECINCT 4
ADDITION AND RENOVATION
8501 SAN DARIO AVE.
LAREDO, TEXAS 78045

DRAWN: HPA
CHECKED: MP
APPROVED: MJ
DATE: 2/29/2012
REVISIONS: 5/15/2012

Job # A+061204

A4.0

EXTERIOR ELEVATIONS

GENERAL ROOF PLAN NOTES:

1. CONTRACTOR SHALL REVIEW AND COORDINATE EXACT CONDITIONS AND COMPONENTS RELATED TO THE WORK DESCRIBED BY THESE DOCUMENTS. ALL WORK SHALL BE IN ACCORDANCE WITH ACCEPTED MANUFACTURER'S PRINTED INSTRUCTIONS AND NRCA STANDARDS.
2. DIMENSIONS, DETAILS, EQUIPMENT SIZE, AND LOCATION SHOWN ON ROOF PLAN ARE FOR INFORMATION AND REFERENCE ONLY. EXACT SIZE, LOCATION, TYPE OF MATERIAL, AND TYPE OF CONSTRUCTION, ARE THE RESPONSABILITY OF THE CONTRACTOR TO CONFIRM AND COORDINATE.
3. REFER TO MANUFACTURER'S NOMENCLATURE FOR TYPE OF ROOF SYSTEM.
4. ALL PIPING/CONDUITS ETC. SHALL BE 10" MIN. ABOVE ROOF SURFACE. PROVIDE PORTABLE PIPE HANGERS WITH PROJECTION PADS. M.E.P. CONTRACTOR SHALL PROVIDE SUPPORT FOR NEW LINES.
5. PROVIDE 22 ga. STAINLESS STEEL, 2D FINISH, TREATED WOOD CURB AND BOX HOOD AT ALL GAS LINE AND WATER LINE ROOF PENETRATIONS. RE: MANUFACTURER'S DETAILS
6. ISOLATE ALL HEAT PIPES/FLUES AS RECOMMENDED IN THE NRCA MANUAL FOR ISOLATED STACK FLASHING.
7. RE: M.E.P. FOR SIZE AND LOCATION OF NEW DECK PENETRATIONS AND ROOF TOP UNIT/EQUIPMENT.
8. REFER TO GENERAL DETAILS FOR TYPICAL SPLASH PAN, ROOF DRAIN, AND OVERFLOW DRAIN DETAILS.
9. CONTRACTOR SHALL ENSURE ALL ROOF TOP PENETRATIONS (EQUIP., SOIL STACKS, ETC.) ARE INSTALLED 2'-0" MIN. FROM OTHER DECK PENETRATIONS, RISE WALLS, AND ROOF EDGE.
10. THRU-WALL BASE FLASHING HEIGHT: 10" MIN. AND 20" MAX. FROM FINISH DECK. DO NOT STEP THRU-WALL FLASHING CLOSER THAN 5'-0" FROM CORNERS. UNLESS OTHERWISE NOTED. CONTRACTOR SHALL COORDINATE.
11. CONTRACTOR SHALL COORDINATE LOCATION OF ROOF HATCH AND ACCESS LADDER.
12. CONTRACTOR SHALL EXAMINE AND ENSURE DRAIN LINES, GUTTERS, AND DOWNSPOUTS ARE FREE OF DEBRIS AND BLOCKAGE, FLUSH WITH WATER TO ENSURE THAT DRAINS FLOW FREELY, WHERE APPLICABLE.
13. PROVIDE SPLASH BLOCKS AT ALL DOWNSPOUT LOCATIONS.
14. RELOCATE ROOF TOP UNIT – COORDINATE WITH ARCHITECT. EXTEND CURB(S) AND ALL DUCT(S) AS REQUIRED.
15. REFER TO MANUFACTURER'S SPECIFICATIONS FOR ROOF TOP UNIT CURB DETAIL

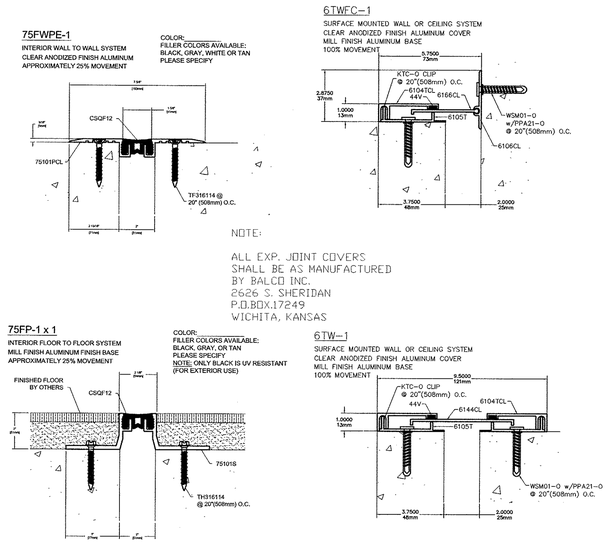

NOTE:

ALL EXP. JOINT COVERS SHALL BE AS MANUFACTURED BY BALCO INC. 2626 S. SHERIDAN P.O.BOX.17249 WICHITA, KANSAS

4 EXP. JT. DETAILS

SCALE: 3"" = 1'-0"

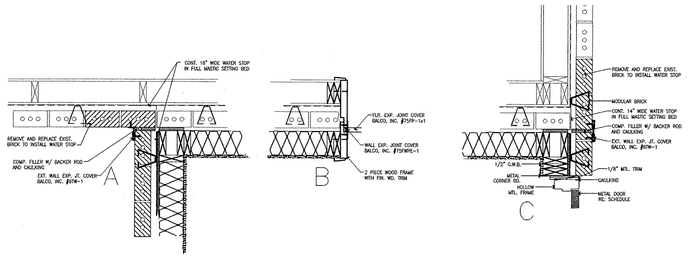

3 EXP. JT. DETAILS

SCALE: ¾" = 1'-0"

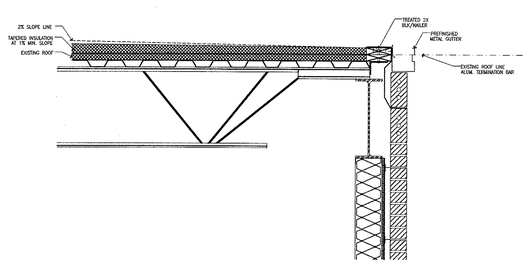

2 ROOF DETAIL

SCALE: ¾" = 1'-0"

BASE BID: FULLY-ADHERED SINGLE-PLY MEMBRANE ON TAPERED INSULATION (DURO-LAST OR EQUAL) 1% MAX. SLOPE COMPLETE WITH GUTTERS AND DOUWNSPOUTS

ADD ALT. #1: REMOVE EXISTING BUILT-UP ROOF AND INSULATION TO DECKING, PROVIDE NEW STANDING SEAM METAL ROOF ON TRANSVERSE CHANNEL FRAMING SYSTEM (T238 OR EQUAL) 2% MIN. SLOPE, AND 9" FIBERGLAS BATT INSULATION, PROVIDE FINISHED PARAPET WALLS, GUTTERS AND DOUWNSPOUTS IN LIEU OF SLOPED "DURO-LAST" ROFFING SYSTEM

RE: MANUFACTURER'S SPECIFICATIONS

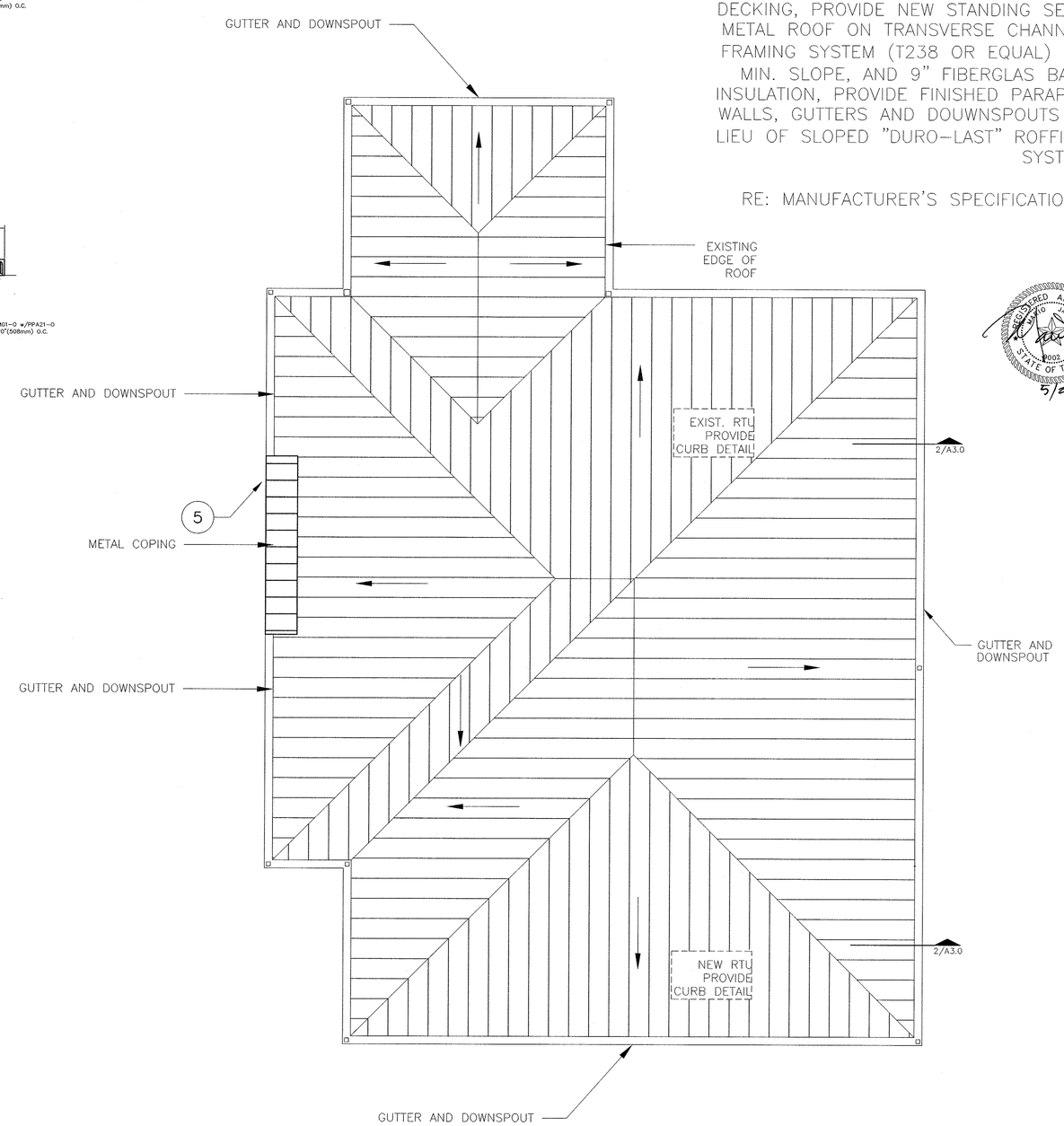

1 ROOF PLAN

SCALE: ⅛" = 1'-0"

NORTH

HICKEY PEÑA & ARCHITECTS

ARCHITECTS PLUS, INC.

REGISTERED ARCHITECT MARIO JASSO 12002 STATE OF TEXAS

5/29/12

JUSTICE OF THE PEACE PRECINCT 4
ADDITION AND RENOVATION
8501 SAN DARIO AVE.
LAREDO, TEXAS 78045

DRAWN: HPA
CHECKED: MP
APPROVED: MJ
DATE: 2/29/2012

REVISIONS:
5/15/2012

Job # A+061204

A3.0

ROOF PLAN

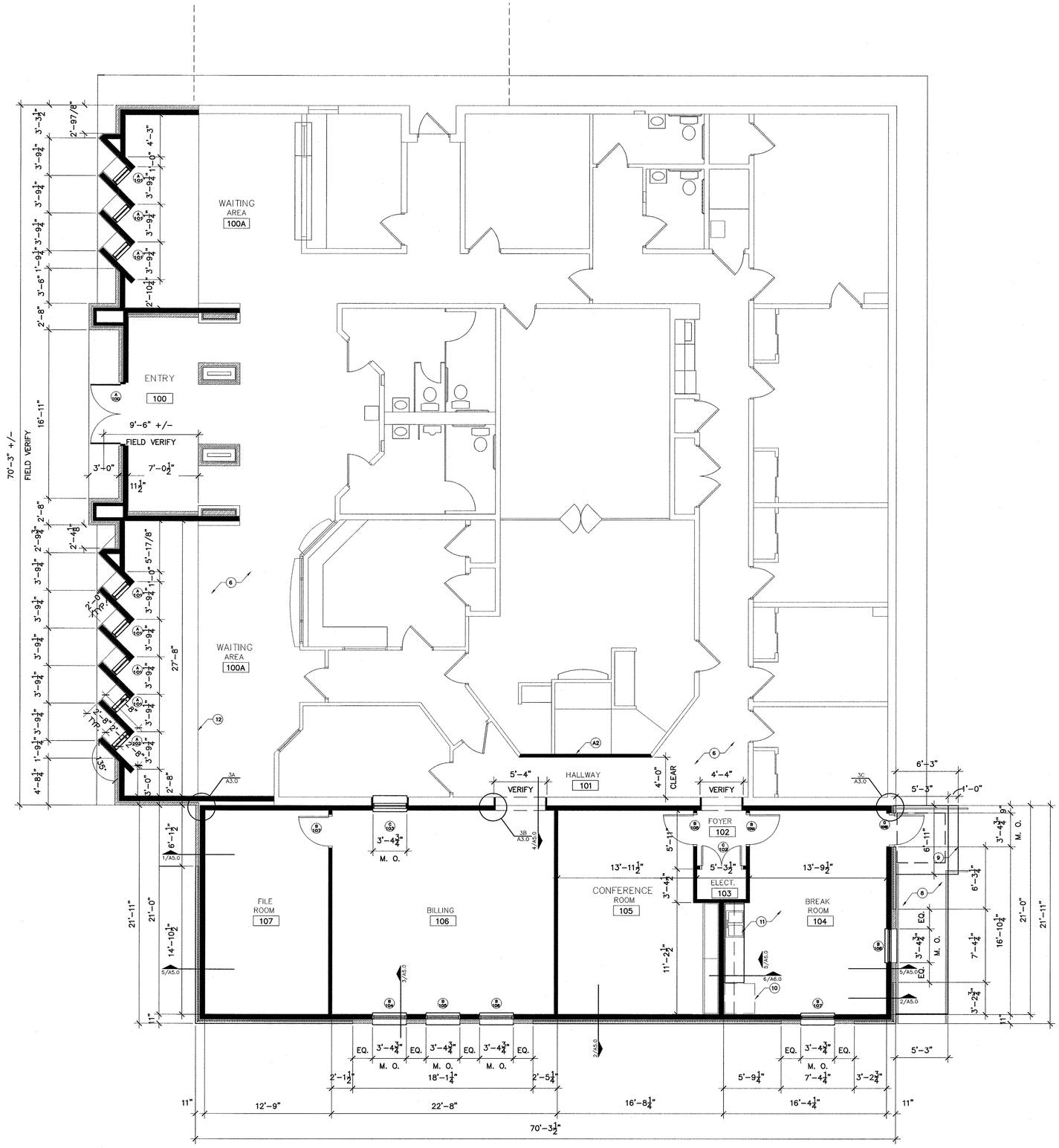

1 FLOOR PLAN

SCALE: 3/16" = 1'-0"

NORTH

GENERAL FLOOR PLAN NOTES:

1. PRIOR TO CONSTRUCTION, CONTRACTOR SHALL VERIFY EXISTING CONDITIONS.
2. PATCH/ REPAIR EXISTING WALLS DAMAGED AS SPECIFIED AND/OR MATCH EXISTING.
3. REFERENCE MEP AND STRUCTURAL DRAWINGS COORDINATE/VERIFY REQUIREMENTS.
4. ALL FLOOR PLAN DIMENSIONS ARE TO FACE OF STUD DIMENSIONS AT CORRIDORS ARE CLEAR DIMENSIONS.
5. ALL FLOOR FINISH CHANGES SHALL OCCUR AT CENTERLINE OF DOOR(S) – UNLESS OTHERWISE NOTED.
6. PROVIDE ALUMINUM THRESHOLD AT FLOOR FINISH CHANGES OR REDUCER/TRANSITION STRIPS.
7. REFERENCE TEXAS ACCESSIBILITY STANDARDS FOR ACCESSIBILITY COMPLIANCE.
8. PROVIDE CONTROL JOINTS AT EXTERIOR PLASTER COORDINATE/VERIFY JOINT LAYOUT WITH ARCHITECT.
9. ALL INTERIOR PARTITION ARE WOOD STUD WALLS UNLESS OTHERWISE NOTED.

FLOOR PLAN KEY NOTES:

1. EXISTING DOOR TO REMAIN PROTECT DURING DEMOLITION
2. EXISTING WALL TO REMAIN PROTECT DURING DEMOLITION
3. NEW DOOR, FRAME, AND HARDWARE RE: DOOR SCHEDULE
4. NEW 3'-4" GLAZING/ FRAME PROVIDE HEADER AT 7'-2" A.F.F.
5. FURNITURE/EQUIPMENT NOT IN CONTRACT
6. NEW FLOOR FINISH RE: FINISH SCHEDULE
7. NEW ACCESS TO JUDGE PLATFORM COORDINATE WITH ARCHITECT
8. NEW RAMP AS REQUIRED BY SITE GRADING COORDINATE WITH ARCHITECT
9. NEW STAIRS AS REQUIRED BY SITE GRADING COORDINATE WITH ARCHITECT
10. HANDRAIL/GUARDRAIL RE: T.A.S.
11. NEW MILLWORK AND SINK AT 34" AFF COORDINATE WITH ARCHITECT
12. MATCH FINISH FLOOR ELEVATION RE: STRUCTURAL

A2 ADD ALTERNATE #3
RELOCATE WALL, CHANGE 3' HALLWAY TO 4' HALLWAY. REPAIR WALL, FLOOR AND CEILING FINISHES TO MATCH EXISTING TO REMAIN. RELOCATE AND RE-WIRE ELECTRICAL/DATA OUTLETS AND SECURITY SYSTEM. MODIFY WOOD RAILING, REPAIR STAIRS AND WOOD TRIM AT RAISED FLOOR.

FLOOR PLAN LEGEND

EXISITING TO REMAIN.....

NEW STUD WALL.....

HICKEY PEÑA & ARCHITECTS

ARCHITECTS PLUS, INC.

JUSTICE OF THE PEACE PRECINCT 4
ADDITION AND RENOVATION
8501 SAN DARIO AVE.
LAREDO, TEXAS 78045

REGISTERED ARCHITECT JAIME J. MARTINEZ 16002 STATE OF TEXAS
5/24/12

DRAWN: HPA
CHECKED: MP
APPROVED: MJ
DATE: 2/29/2012

REVISIONS:
5/15/2012

Job # A+061204

A2.0

FLOOR PLAN

GENERAL SITE PLAN NOTES:

1. CONTRACTOR SHALL VERIFY EXISTING SITE, BLDG. CONDITIONS, AND DIMENSIONS IN FIELD PRIOR TO SUBMITTING PROPOSAL.
2. REMOVE ALL EXISTING TREES AND VEGETATION, IN BUILDING AND PAVED AREAS, AS REQUIRED.
3. ALL EXISTING TREES AND VEGETATION, NOT IN IMPROVED AREAS, SHALL REMAIN UNLESS OTHERWISE NOTED.
4. PROVIDE CONCRETE WALKS AS INDICATED ON PLAN: C.J. AT 5'-0" O. C. MAX. AND E.J. AT 20'-0" O.C. MAX. – U. O. N. VERIFY JOINT LAYOUT WITH ARCHITECT.
5. REFERENCE M.E.P. FOR LOCATION OF ALL SITE LIGHTNING/ PLUMBING REQUIREMENTS
6. FIRE LANES: ALL CURBS AT DRIVEWAYS SHALL BE PAINTED AND READ: "FIRE LANE NO PARKING" AS REQUIRED BY LOCAL AUTHORITY – COORDINATE/ VERIFY WITH ARCHITECT.
7. VERIFY/COORDINATE ALL SITE GRADING AND SUBSURFACE DRAINAGE SYSTEM WITH ARCHITECT.
8. VERIFY/COORDINATE ALL LOCATION OF CONTROL JOINTS AND EXPANSION JOINTS FOR ALL CONCRETE PAVED AREAS WITH ARCHITECT.
9. VERIFY/COORDINATE DIMENSION CONTROL PLAN OF DRIVES, CURB RADIUS, AND BLDG. LOCATION WITH ARCHITECT.

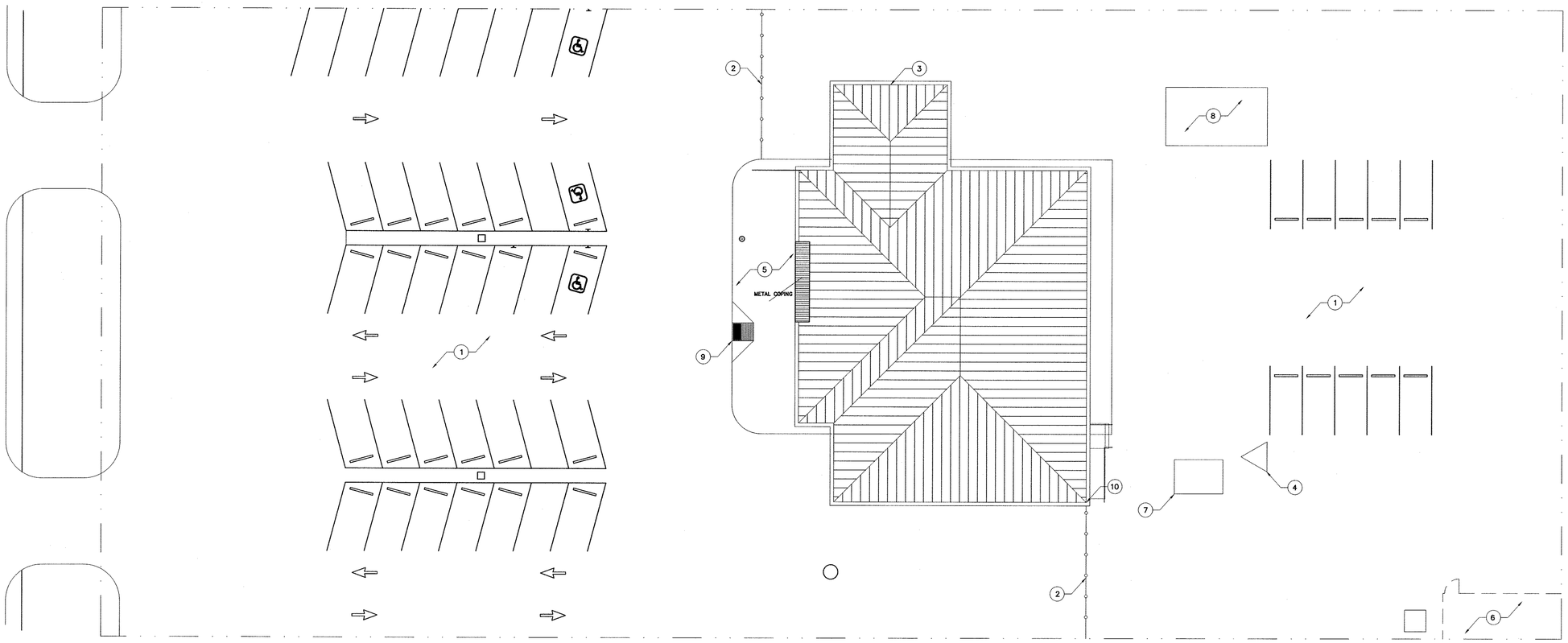

SITE PLAN KEY NOTES:

1. EXISTING PARKING TO REMAIN PROTECT DURING DEMO./CONSTRUCTION
2. EXISTING FENCE TO REMAIN PROTECT DURING DEMO./CONSTRUCTION
3. EXISTING GAS PUMPS/STORAGE PROTECT DURING DEMO./CONSTRUCTION
4. EXISTING TOWER TO REMAIN PROTECT DURING DEMO./CONSTRUCTION
5. EXISTING SLAB TO REMAIN PROTECT DURING DEMO./CONSTRUCTION
6. EXISTING GASOLINE TANKS PROTECT DURING DEMO./CONSTRUCTION
7. EXISTING RADIO ROOM TO REMAIN PROTECT DURING DEMO./CONSTRUCTION
8. EXISTING A/C YARD PROTECT DURING DEMO./CONSTRUCTION
9. NEW CURB RAMP RE: TEXAS ACCESSIBILITY STANDARDS
10. REMOVE FENCE AS REQURIED PREP. SURFACE FOR NEW CONSTRUCTION

REGISTERED ARCHITECT
MARIO JASSO
9002
STATE OF TEXAS
5/29/12

NORTH

1 SITE PLAN

SCALE: 1/16" = 1'-0"

HICKEY PEÑA & ARCHITECTS

ARCHITECTS PLUS, INC.

JUSTICE OF THE PEACE PRECINCT 4
ADDITION AND RENOVATION
8501 SAN DARIO AVE.
LAREDO, TEXAS 78045

DRAWN: HPA
CHECKED: MP
APPROVED: MJ
DATE: 2/29/2012
REVISIONS: 5/15/2012

Job # A+061204

A1.0

SITE PLAN

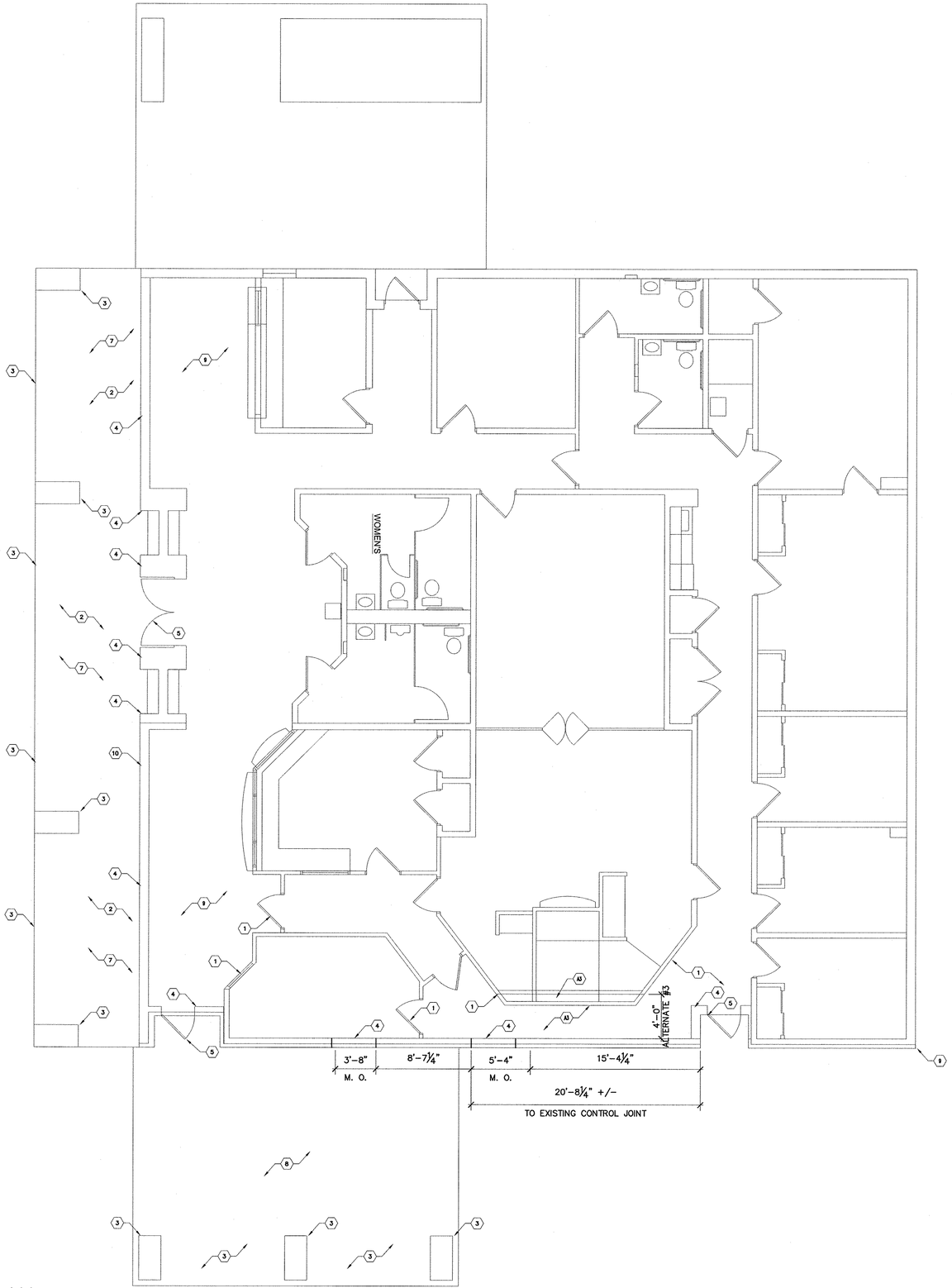

1 DEMOLITION FLOOR PLAN

SCALE: 3/16" = 1'-0"

GENERAL DEMOLITION NOTES:

1. CONTRACTOR SHALL VERIFY EXISTING SITE, BLDG. CONDITIONS, AND DIMENSIONS IN FIELD PRIOR TO SUBMITTING PROPOSAL.
2. CONTRACTOR SHALL NOT SCALE DRAWINGS FOR THE SOLE PURPOSE OF SUBMITTING PROPOSAL. NOTIFY ARCHITECT IF ANY DISCREPANCIES IN WRITING PRIOR TO PROPOSAL.
3. AFTER AWARD OF CONTRACT, REQUESTS FOR ADDITIONAL MONEYS SHALL NOT BE APPROVED IF THE WORK HAD BEEN ANTICIPATED DURING A SITE VISIT BY THE CONTRACTOR.
4. ALL EXISINTG STRUCTURES AND FINISHES SHOWN TO REMAIN SHALL BE PROTECTED TO PREVENT DAMAGE. ANY DAMAGE SHALL BE REPAIRED OR REPLACED TO MATCH EXISTING – UNLESS OTHERWISE NOTED.
5. EXISTING AREA REQUIRING MINOR DEMOLITION OR REPAIR FOR EXECUTION SHALL BE REPAIRED TO MATCH EXISTING SURROUDNING MATERIALS – UNLESS OTHERWISE NOTED.
6. PRIOR TO INSTALLATION/ REPAIR OF WORK ITEMS, SCHEDULE WALK–THROUGH MEETING WITH OWNER'S REPRESENTATIVE. CONFIRM SCOPE OF WORK, AND REVIEW CONDITIONS OF OF PREPARATION AND INSTALLATION PROCEDURES.
7. ALL DEMOLITION ACTIVITIES SHALL BE PERFORMED SO AS TO PRODUCE MINIMAL DISTURBANCE TO EXISTING FACILITY AND OCCUPANTS: MINIMIZE EXCESSIVE AND PROLONGED NOISE AND DUST LEVELS.
8. PRIOR TO INSTALLATION OF NEW FLOOR FINISH, CLEAN AND PREPARE SUBFLOOR AS REQUIRED.
9. REMOVE AND RELOCATE EXISTING UTILITIES COORDINATE WITH OWNER AND MEP.
10. COORDINATE/ VERIFY EXACT LOCATIONS OF NEW OPENINGS AT EXISTING WALLS AND PARTITIONS WITH FLOOR PLAN.
11. OWNER SHALL HAVE RIGHT OF REFUSAL ON ALL EQUIPMENT AND SALVAGABLE MATERIALS TO BE REMOVED.
12. CONTRACTOR SHALL REMOVE DEBRIS DAILY UNLESS OTHERWISE NOTED.
13. CONTRACTOR SHALL COORDINATE WITH ANY AND ALL TRADES FOR EXTENT OF DEMOLITION NOT SHOWN ON THESE DRAWINGS.

DEMO. FLOOR PLAN LEGEND

EXISITING TO REMAIN.....

EXISTING TO BE DEMOLISHED.....

DEMOLITION KEY NOTES:

1. EXISTING TO REMAIN PROTECT DURING DEMOLITION
2. REMOVE EXISTING SLAB PREP. FOR NEW FINISH
3. REMOVE EXISTING BRICK VENEER COORDINATE/ VERIFY STRUCTURE
4. REMOVE EXISTING WALL ASSEMBLY COORDINATE/ VERIFY STRUCTURE
5. REMOVE EXISTING DOOR, FRAME, AND HARDWARE. SALVAGE AND RETURN TO OWNER
6. REMOVE EXISTING SIDEWALK PREP. FOR NEW FINISH
7. REMOVE PLASTER SOFFIT COORDINATE/ VERIFY MEP
8. REMOVE EXISTING CANOPY COORDINATE/ VERIFY STRUCTURE
9. REMOVE EXISTING SURVEILLANCE SALVAGE AND RELOCATE
10. REMOVE EXISTING BLDG. PLAQUE SALVAGE AND RELOCATE
11. REMOVE FOUNDATION/FINISH FLOOR AS REQUIRED RE: STRUCTURAL

A3 ADD ALTERNATE #3
RELOCATE WALL, CHANGE 3' HALLWAY TO 4' HALLWAY. REPAIR WALL, FLOOR AND CEILING FINISHES TO MATCH EXISTING TO REMAIN. RELOCATE AND RE–WIRE ELECTRICAL/DATA OUTLETS AND SECURITY SYSTEM. MODIFY WOOD RAILING, REPAIR STAIRS AND WOOD TRIM AT RAISED FLOOR.

NORTH

REGISTERED ARCHITECT
STATE OF TEXAS
9002
5/29/12

HICKEY PEÑA & ARCHITECTS

ARCHITECTS PLUS, INC.

JUSTICE OF THE PEACE PRECINCT 4
ADDITION AND RENOVATION
8501 SAN DARIO AVE.
LAREDO, TEXAS 78045

DRAWN: HPA
CHECKED: MP
APPROVED: MJ
DATE: 2/29/2012
REVISIONS: 5/15/2012

Job # A+061204

D2.0

DEMOLITION FLOOR PLAN

LEGAL DESCRIPTION

1.4733 Acre
Portion 23
Abstract 283

TOTAL GROSS AREA: 7,049 sq. ft.
7,049 sq. ft. /100 sq. ft. gross = 70 Occupants

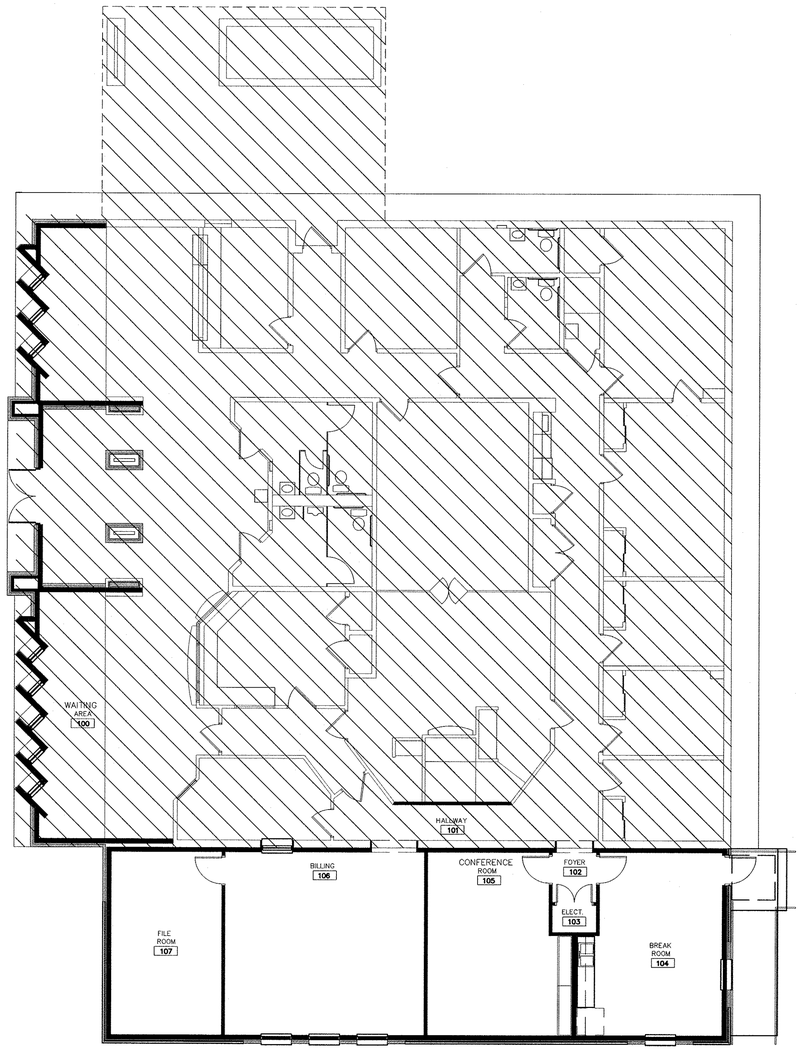

1 FLOOR PLAN
SCALE: N. T. S.

NORTH

INDEX OF DRAWINGS

COVER SHEET
G0.0 INDEX, CODE SUMMARY, MAPS
D2.0 DEMOLITION FLOOR PLAN
A2.0 FLOOR PLAN
A3.0 ROOF PLAN
A4.0 EXTERIOR ELEVATIONS (BASE BID)
A4.1 EXTERIOR ELEVATIONS (ALTERNATE BID)
A5.0 BLDG. & WALL SECTIONS
A6.0 DETAILS

S-1 GENERAL NOTES & TYPICAL DETAILS
S-2R FOUNDATION PLAN & DETAILS
S-3R ROOF FRAMING PLAN & DETAILS

MEP1 GENERAL NOTES & SYMBOLS
MEP2 SPECIFICATIONS
M1 HVAC
M2 MECH. SCHEDULES
E1 LIGHTING PLAN
E2 POWER PLAN
E3 PANELS & RISER DIAGRAMS
P1 PLUMBING

CODE SUMMARY

BASED ON THE 2009 INTERNATIONAL BUILDING CODE AND AMENDMENTS AS ADOPTED BY THE CITY OF LAREDO

BUILDING OCCUPANCY: GROUP B
OCCUPANCY SEPARATION: NONE REQUIRED
TYPE OF CONTRUCTION: TYPE II – B
FIRE PROTECTION: NON-SPRINKLERED

NO SPECIAL INSPECTION REQUIREMENTS

NO FIRE ALARM REQUIREMENTS

REGISTERED ARCHITECT MARIO PEÑA 9002 STATE OF TEXAS
5/29/12

HICKEY PEÑA & ARCHITECTS
ARCHITECTS PLUS, INC.

JUSTICE OF THE PEACE PRECINCT 4
ADDITION AND RENOVATION
8501 SAN DARIO AVE.
LAREDO, TEXAS 78045

DRAWN: HPA
CHECKED: MP
APPROVED: MJ
DATE: 2/29/2012

REVISIONS:
5/15/2012

Job # A+061204

G0.0

INDEX, CODE SUMMARY CODE ANALYSIS & MAPS

JUSTICE OF THE PEACE PRECINCT 4
ADDITION AND RENOVATION
County of Webb

Commissioners Court

DANNY VALDEZ - COUNTY JUDGE

FRANK SCIARAFFA - PRECINCT 1

ROSAURA "WAWI" TIJERINA - PRECINCT 2

JERRY GARZA - PRECINCT 3

JAIME CANALES - PRECINCT 4

STRUCTURAL

SYNERGY STRUCTURAL ENGINEERING, INC.
Victor DeAnda, PE
901 Victoria St. Suite "E"
Laredo, TX. 78040
(956) 753-5860
(fax) 753-6210
victor@synergy-se.com

ARCHITECT

ARCHITECTS PLUS, INC.
Mario Jasso, AIA
101 Merlin Rd.
Laredo, TX 78041
(956) 717-2222
(fax) 717-9995
aplusinc@stx.rr.com

HICKEY PEÑA ARCHITECTS
Mario A. Peña, AIA
919 Victoria St.
Laredo, TX 78040
(956) 722-8186
(fax) 815 846-1546
mario@hickeypena.com

MEP

RCE,INC.
Mechanical, Electrical Engineers
Rosario Carrillo, PE
5323 McCullough Ave.
San Antonio, TX 78212
(210) 734-6004
(fax) 736-2058
rcarrillo@rceeng.com

REGISTERED ARCHITECT MARIO A. PEÑA 19002 STATE OF TEXAS

4/29/02